YAMAHA

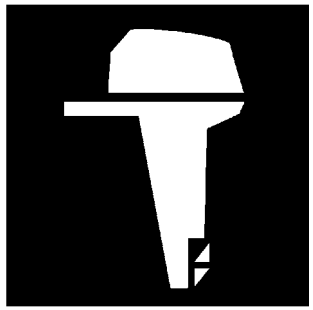

PARTS CATALOGUE
CATALOGUE DE PIECES DETACHEES

F80A'04 (67G3)
F100A'04 (67F3)

1C67G-300F1

(2C67G-300F1)

YAMAHA
GENUINE
Parts & Accessories

FOREWORD

This Parts Catalogue is related to the parts for the model(s) on the cover page. When you are ordering replacement parts, please refer to this Parts Catalogue and quote both part numbers and part names correctly.

1. Modifications or additions which have been made after the issue of the Parts Catalogue will be announced in the Parts News.
   It is advisable that you make the necessary corrections to the Parts Catalogue according to the Parts News.

2. Abbreviations
   The following abbreviations are used in this Parts Catalogue.

   "UR" Use specified parts number.
   "UN" Use as many as needed.
   "AP" Alternate Parts
   "LM" Locally Made (Parts need to be ordered locally)
   "F#" Frame No. (Applicable machine No.)
   "O/S" Over Size

3. The number of components for assembly
   - Parts, which are to be supplied in an assembly, are listed with a dot (.) in front of the part name as shown below.
   - The numeral appearing to the right of each component part indicates the quantity of parts for each assembly unit.

PART NO.	DESCRIPTION	Q'TY	REMARKS
2F5–83310–60	FRONT FLASHER LIGHT ASSY	2	
115–83311–60	.BULB (6V–18W)	1	

4. Applicable colours of graphics are represented in the "REMARKS" as shown below.

PART NO.	DESCRIPTION	Q'TY	REMARKS
2N4–24110–00–X5	FUEL TANK COMP.	2	MXR
3J1–24240–10	.GRAPHIC, FUEL TANK	1	FOR MXR

5. Note that the illustrations for reference in finding parts numbers are not to be used for assembling. When assembling, please use the applicable service manual.

6. The asterisk (*) before a reference number indicates modified items after the first edition.

7. Applicable Serial No.

   Engine Serial No.

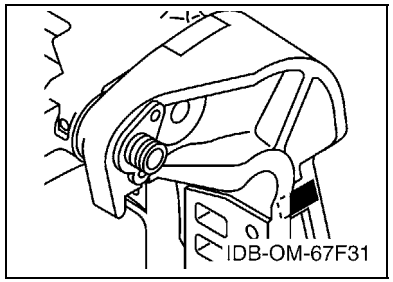

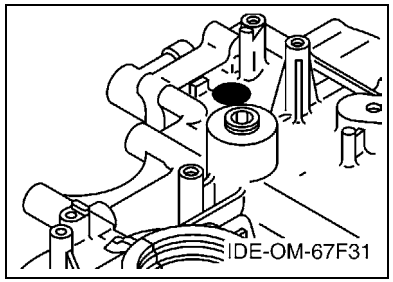

8. Applicable Engine Starting Serial No.

Model	Serial No.	Model	Serial No.
F80A	67G-1002845	F100A	67F-1002496

9. Applicable Colour Code

Abbreviation	Colour Name	Colour Code
DBNM2	DARK BLUISH GRAY METALLIC 2	004D

10. Quantity Column Information

Column No.	Name Of Q'ty Column	Applicable Model
1	F80	F80AET
2	F100	F100AET

AVANT–PROPOS

Ce catalogue de pièces détachées concerne les pièces pour le(s) modèle(s) indiqué(s) sur la page de couverture. Lorsque vous commandez des pièces de rechange, veuillez vous référer à ce catalogue de pieces détachées et indiquer clairement les numéros et les noms des pièces détachées.

1. Les modifications ou ajouts ayant été effectués après la parution du catalogue de pièces détachées seront décrits dans les Bulletins d'information concernant les pièces détachées.
   Il est recommandé que vous apportiez les corrections nécessaires au catalogue des pièces détachées en vous référant aux Bulletins d'information.

2. Abréviations
   Dans ce catalogue, les abréviations suivantes sont utilisées:

   "UR" Utiliser le numéro de pièces spécifié.
   "UN" Utiliser autant que nécessaire.
   "AP" Pièces de substitution
   "LM" Fabrication locale (les pièces doivent être commandées localement.)
   "F#" N° de cadre (applicable au N° de série)
   "O/S" Surdimensionné

3. Nombre de pièces d'un assemblage
   - Les pièces fournies comme composants d'un assemblage sont précédées d'un point (.) de la manière indiquée ci–dessous.
   - Le chiffre apparaissant à la droite de chaque composant indique la quantité de pièces pour chaque unité d'assemblage.

N° PIECES	DESCRIPTION	QTE	REMARQUES
2F5–83310–60	ENS. CLIGNOTANT AVANT	2	
115–83311–60	.AMPOULE (6V–18W)	1	

4. Les couleurs concernant les graphiques sont indiquées dans la colonne "REMARQUES", comme indiqué ci–dessous.

N° PIECES	DESCRIPTION	QTE	REMARQUES
2N4–24110–00–X5	RESERVOIR A ESSENCE.	2	MXR
3J1–24240–10	.GRAPHIQUE	1	POUR MXR

5. Veuillez noter que les illustrations sont indiquées à titre de référence pour trouver les numéros de pièces, non pour être utilisées lors de l'assemblage. Lors de l'assemblage, veuillez utiliser le manuel d'entretien adéquat.

6. L'astérisque (*) placé devant un numéro de référence indique des éléments qui ont été modifiés après la première édition.

7. N° de série applicable

   N° de Série du moteur

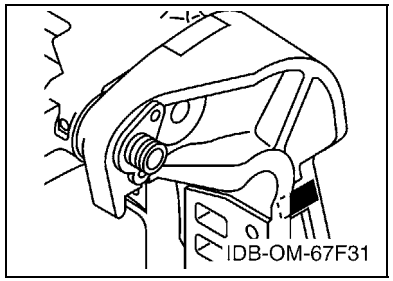

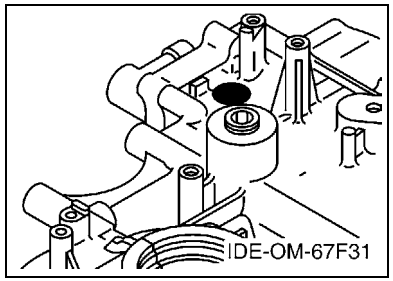

8. N° de série initial du moteur applicable

Modèle	N° de série	Modèle	N° de série
F80A	67G-1002845	F100A	67F-1002496

9. Code couleur applicable

Abréviation	Nom de la couleur	Code couleur
DBNM2	DARK BLUISH GRAY METALLIC 2	004D

10. Informations relatives à la colonne Quantité

N° de la colonne	Nom de la colonne Qté	Modèle applicable
1	F80	F80AET
2	F100	F100AET

CONTENTS

SHEET1/2
TOP COWLING A4
CYLINDER & CRANKCASE 1 ..... A5
CRANKSHAFT & PISTON A7
CYLINDER & CRANKCASE 2 ..... B1
VALVE B3
INTAKE B6
CARBURETOR 1 ..... B7
CARBURETOR 2 ..... C3
CARBURETOR 3 ..... C4
FUEL 1 ..... C5
FUEL 2 ..... C7
GENERATOR D1
ELECTRICAL 1 ..... D2
ELECTRICAL 2 ..... D4
ELECTRICAL 3 ..... D6
STARTING MOTOR E1
BOTTOM COWLING E3
STEERING 1 ..... E5
STEERING 2 ..... F1
STEERING FRICTION F3
CONTROL F4
BRACKET 1 ..... F6

INDEX

NUMERICAL INDEX G1

SHEET2/2
BRACKET 2 ..... A4*
OPTIONAL PARTS A6*
POWER TRIM & TILT ASSY 1 ..... A7*
POWER TRIM & TILT ASSY 2 ..... B4*
UPPER CASING B5*
OIL PAN B7*
LOWER CASING & DRIVE 1 ..... C2*
LOWER CASING & DRIVE 2 ..... C5*
FUEL TANK C7*
STEERING GUIDE D1*
REMOTE CONTROL BOX D2*
REMOTE CONTROL ASSY D3*
METER D6*
REPAIR KIT 1 ..... D7*
REPAIR KIT 2 ..... E1*
REPAIR KIT 3 ..... E2*

INDEX

NUMERICAL INDEX G1*

TABLE DES MATIERES

Feuille1/2

CAPOT SUPERIEUR A4
CYLINDRE & CARTER 1 ..... A5
VILEBREQUIN & PISTON A7
CYLINDRE & CARTER 2 ..... B1
SOUPAPE B3
ADMISSION B6
CARBURATEUR 1 ..... B7
CARBURATEUR 2 ..... C3
CARBURATEUR 3 ..... C4
CARBURANT 1 ..... C5
CARBURANT 2 ..... C7
GENERATRICE D1
PARTIE ELECTRIQUE 1 ..... D2
PARTIE ELECTRIQUE 2 ..... D4
PARTIE ELECTRIQUE 3 ..... D6
DEMARREUR ELECTRIQUE E1
CAPOT INFERIEUR E3
DIRECTION 1 ..... E5
DIRECTION 2 ..... F1
CUVETTE POIGNEE DE DIRECTION F3
COMMANDE F4
SUPPORT 1 ..... F6

INDEX

INDEX NUMERIQUE G1

Feuille2/2

SUPPORT 2 ..... A4*
PIECES OPTIONNELLES A6*
PUISSANCE PARER ET INCLINER 1 ..... A7*
PUISSANCE PARER ET INCLINER 2 ..... B4*
FOURREAU B5*
VENTILATEUR D'HUILE B7*
BOITIER D'HELICE TRANSMISSION 1 ..... C2*
BOITIER D'HELICE TRANSMISSION 2 ..... C5*
RESERVOIR A CARBURANT C7*
FIXATION DE DIRECTION D1*
BOITIER DE COMMANDE A DISTANCE D2*
BOITIER DE COMMANDE A DISTANCE D3*
COMPTEUR D6*
KITS DE REPARATION 1 ..... D7*
KITS DE REPARATION 2 ..... E1*
KITS DE PEPARATION 3 ..... E2*

INDEX

INDEX NUMERIQUE G1*

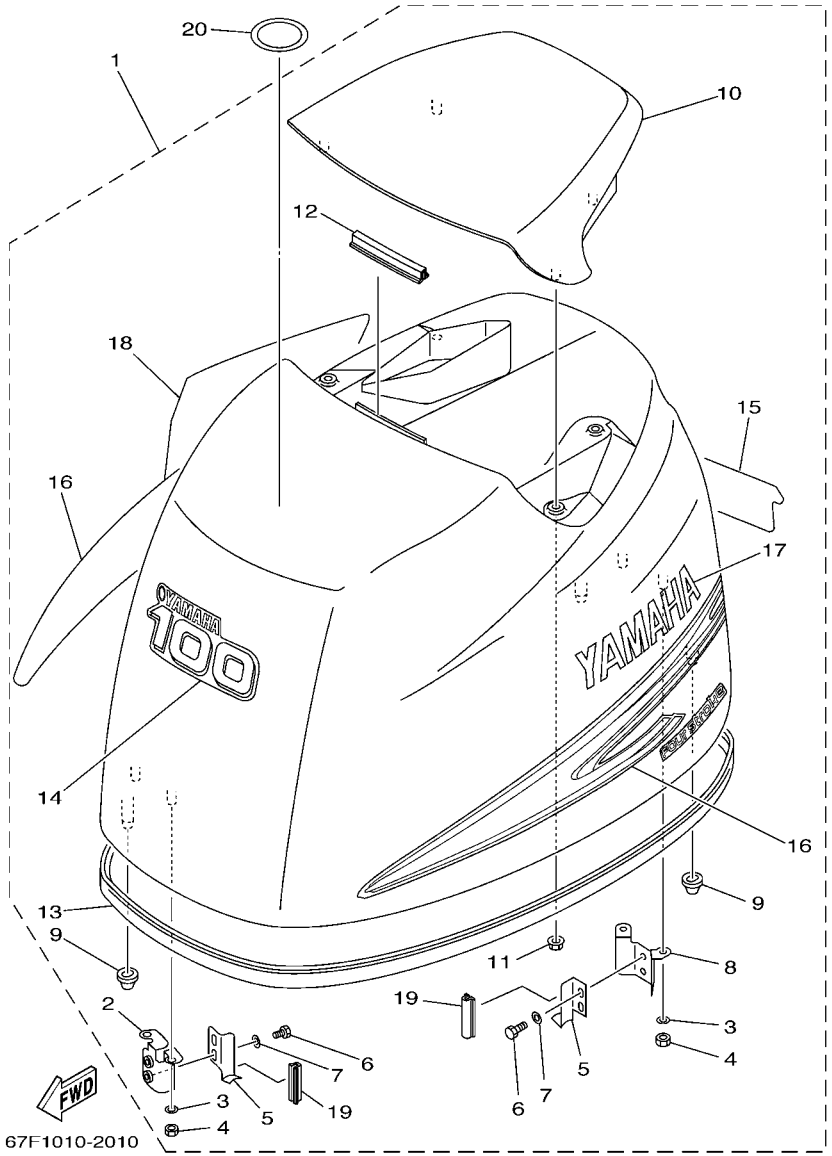

FIG. 1 TOP COWLING — CAPOT SUPERIEUR

REF. NO.	PART NO. N° PIECES	DESCRIPTION DESCRIPTION	F80	F100				REMARKS REMARQUES
1	67F–42610–10–4D	TOP COWLING ASSY CAPOT (ENS.)		1				
	67G–42610–10–4D	TOP COWLING ASSY CAPOT (ENS.)	1					
2	67F–42647–00	.HOLDER, CLAMP BAND .SUPPORT, SANDOW DE SERRAGE	1	1				
3	92990–06100	.WASHER, SPRING .RONDELLE, GROWER	4	4				
4	95380–06600	.NUT, HEXAGON .ECROU	4	4				
5	67F–42652–00	.HOOK .CROCHET	2	2				
6	97095–06012	.BOLT .BOULON	4	4				
7	92995–06600	.WASHER .RONDELLE	4	4				
8	67F–42649–00	.HOLDER, CLAMP BAND .SUPPORT, SANDOW DE SERRAGE	1	1				
9	67F–42662–00	.DAMPER .AMORTISSEUR	3	3				
10	67F–42613–00–4D	.MOLDING, AIR DUCT .MANCHON A AIR	1	1				
11	90179–06M24	.NUT .ECROU	4	4				
12	61N–42628–00	.SEAL .JOINT	1	1				
13	67F–42615–00	.SEAL .JOINT	1	1				
14	67F–42677–10	.GRAPHIC, FRONT .ADHESIF, AVANT		1				
	67G–42677–10	.GRAPHIC, FRONT .ADHESIF, AVANT	1					
15	67F–42678–10	.GRAPHIC, REAR .ADHESIF, ARRIERE		1				
	67G–42678–10	.GRAPHIC, REAR .ADHESIF, ARRIERE	1					
16	67F–W0070–10	.GRAPHIC SET .JEU DIEMBLEMES	1	1				
17	67F–42681–10	.MARK, COWLING .ADHESIF, CAPOT	1	1				
18	67F–42682–10	.MARK, COWLING .ADHESIF, CAPOT	1	1				
19	67F–42628–00	.SEAL .JOINT	2	2				
20	67F–13434–02	LABEL, CAUTION ETIQUETTE, ATTENTION	1	1				

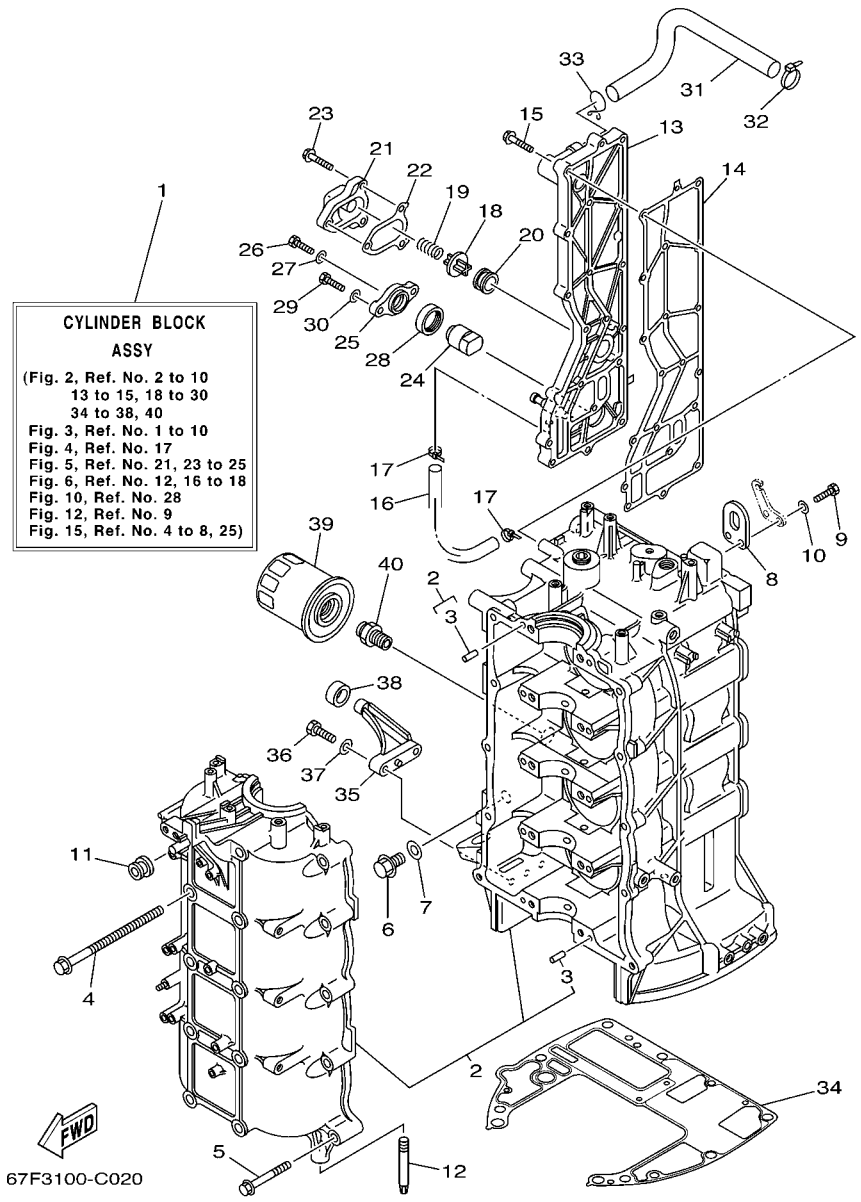

FIG. 2 CYLINDER & CRANKCASE 1 CYLINDRE & CARTER 1

REF. NO.	PART NO. N° PIECES	DESCRIPTION DESCRIPTION	F80	F100				REMARKS REMARQUES
1	67F–W009B–05–1S	CYLINDER BLOCK ASSY CYLINDRE GROUPE (ENS.)	1	1				
2	67F–15100–03–1S	CRANKCASE ASSY CARTER DE MOTEUR COMPLET	1	1				
3	93606–12019	.PIN, DOWEL .GOUPILLE	10	10				
4	90119–10M88	BOLT, WITH WASHER BOULON, AVEC RONDELLE	10	10				
5	90119–08M66	BOLT, WITH WASHER BOULON, AVEC RONDELLE	10	10				
6	90340–14M06	PLUG, STRAIGHT SCREW PLOT, FILETE DROIT	1	1				
7	90430–14115	GASKET JOINT	1	1				
8	62Y–11119–00	HANGER, ENGINE ANNEAU, LEVAGE	2	2				
9	97095–06020	BOLT BOULON	4	4				
10	92995–06600	WASHER RONDELLE	4	4				
11	90480–12072	GROMMET PASSE-FIL	1	1				
12	67F–15142–00	GUIDE 1 GUIDE 1	2	2				
13	67F–41113–01–1S	OUTER COVER, EXHAUST COUVERCLE, ECHAPPEMENT	1	1				
14	67F–41114–A0	GASKET, EXHAUST OUTER COVER JOINT, COUVERCLE D'ECHAPPEMENT	1	1				
15	90119–06MA4	BOLT, WITH WASHER BOULON, AVEC RONDELLE	18	18				
16	90445–10M40	HOSE (L330) DURITE (L330)	1	1				
17	90465–11M10	CLAMP BRIDE	2	2				
18	6G5–12416–00	VALVE, PRESSURE CONTROL SOUPAPE DE CONTROLEUR PRESS	1	1				
19	90501–16M11	SPRING, COMPRESSION RESSORT, COMPRESSION	1	1				
20	90480–20M05	GROMMET PASSE-FIL	1	1				
21	67F–1246A–00–1S	COVER 1 COUVERCLE 1	1	1				
22	67F–12435–A0	GASKET JOINT	1	1				
23	90119–06MA2	BOLT, WITH WASHER BOULON, AVEC RONDELLE	3	3				
24	68V–11325–00	ANODE ANODE	1	1				
25	67F–11327–00–94	COVER, ANODE COUVERCLE	1	1				
26	97075–06020	BOLT BOULON	1	1				
27	92995–06600	WASHER RONDELLE	1	1				

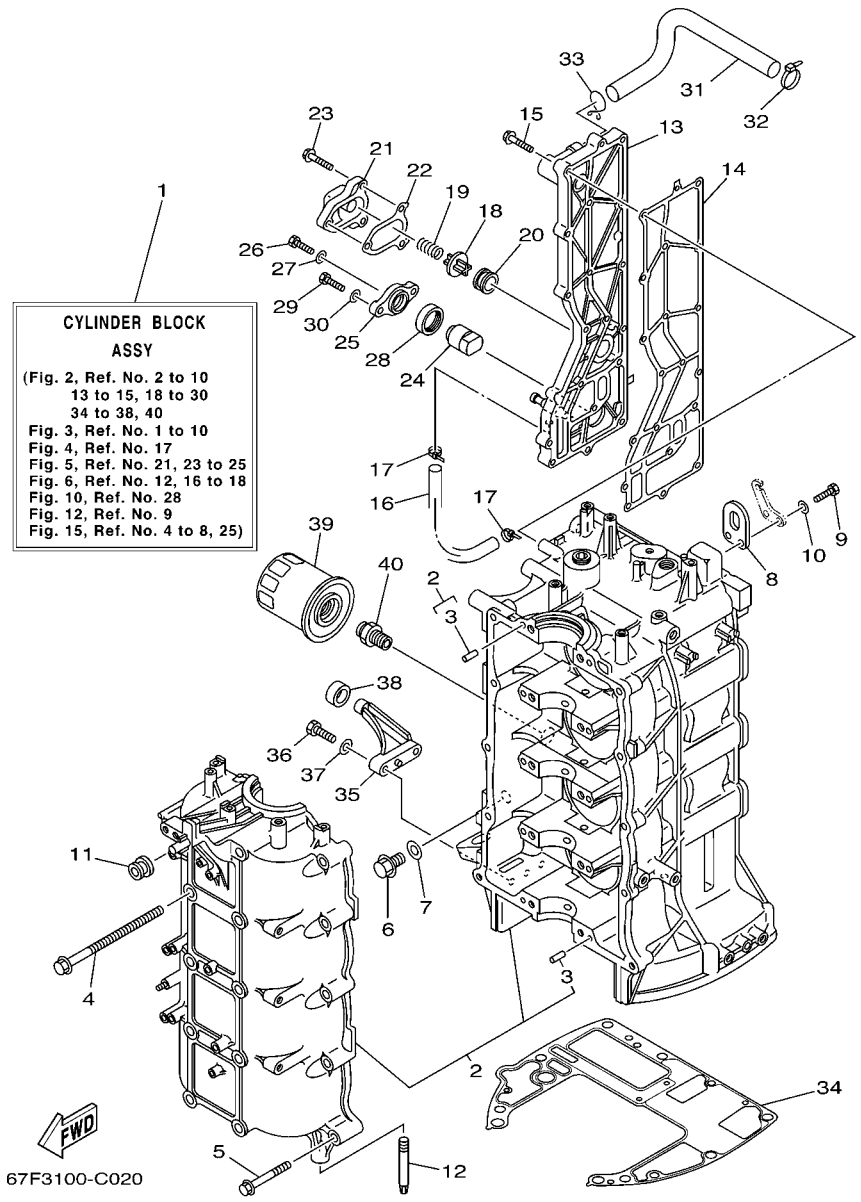

FIG. 2 CYLINDER & CRANKCASE 1 CYLINDRE & CARTER 1

REF. NO.	PART NO. N° PIECES	DESCRIPTION DESCRIPTION	F80	F100				REMARKS REMARQUES
28	67F–11328–00	GROMMET, ANODE PASSE-FIL	1	1				
29	97075–08025	BOLT BOULON	2	2				
30	92995–08600	WASHER RONDELLE	2	2				
31	67F–1243A–00	HOSE 1 DURITE 1	1	1				
32	90465–11M10	CLAMP BRIDE	1	1				
33	90467–20M15	CLIP JONC	1	1				
34	68V–11351–00	GASKET, CYLINDER JOINT, D'EMBASE	1	1				
35	67F–42761–00–94	STOPPER PLAQUETTE	2	2				
36	97095–06025	BOLT BOULON	4	4				
37	92995–06600	WASHER RONDELLE	4	4				
38	68F–44533–00	DAMPER, UPPER MOUNT RUBBER COUVERCLE, SUSPENSION INFERIEU	2	2				
39	5GH–13440–00	ELEMENT ASSY, OIL CLEANER ELEMENT, FILTRE A HUILE	1	1				
40	90401–20145	BOLT, UNION BOULON, RACCORD	1	1				

FIG. 3 CRANKSHAFT & PISTON VILEBREQUIN & PISTON

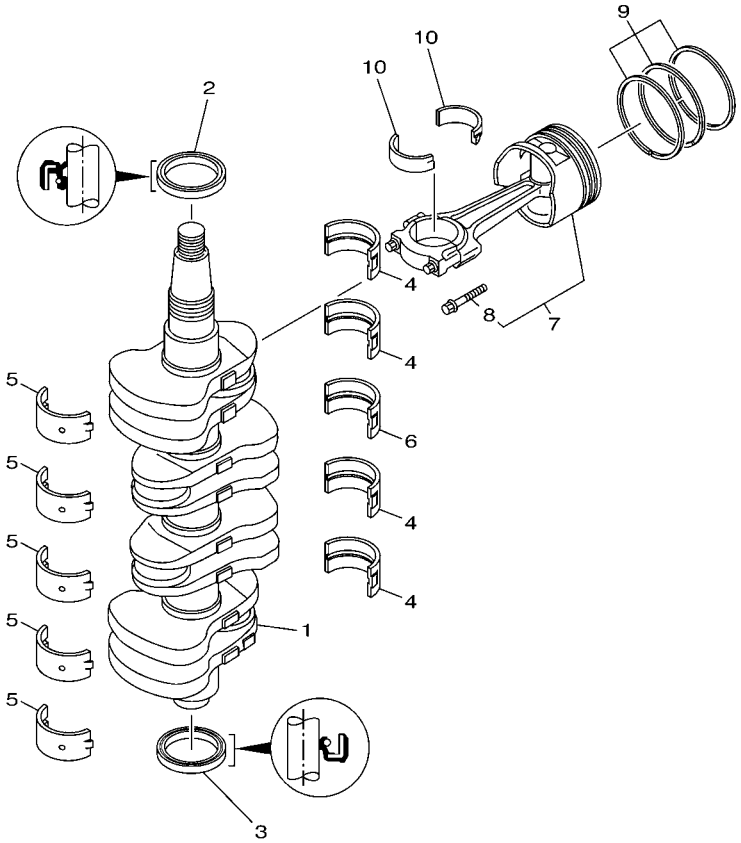

67F0010-0031

REF. NO.	PART NO. N° PIECES	DESCRIPTION DESCRIPTION	F80	F100				REMARKS REMARQUES
1	67F–11411–00	CRANKSHAFT VILEBREQUIN COMPLET	1	1				
2	93102–48009	OIL SEAL JOINT SPY	1	1				
3	93101–48002	OIL SEAL JOINT SPY	1	1				
4	67F–11416–00	PLANE BEARING, CRANKSHAFT 1 COUSSINET DE VILEBREQUIN 1	4	4				UR GREEN UR GREEN
	67F–11416–10	PLANE BEARING, CRANKSHAFT 1 COUSSINET DE VILEBREQUIN 1	4	4				UR BLUE UR BLUE
	67F–11416–20	PLANE BEARING, CRANKSHAFT 1 COUSSINET DE VILEBREQUIN 1	4	4				UR RED UR RED
5	67F–11417–00	PLANE BEARING, CRANKSHAFT 2 COUSSINET DE VILEBREQUIN 2	5	5				UR YELLOW UR YELLOW
	67F–11417–10	PLANE BEARING, CRANKSHAFT 2 COUSSINET DE VILEBREQUIN 2	5	5				UR GREEN UR GREEN
	67F–11417–20	PLANE BEARING, CRANKSHAFT 2 COUSSINET DE VILEBREQUIN 2	5	5				UR BLUE UR BLUE
	67F–11417–30	PLANE BEARING, CRANKSHAFT 2 COUSSINET DE VILEBREQUIN 2	5	5				UR RED UR RED
6	67F–11418–00	PLANE BEARING, CRANKSHAFT 3 COUSSINET DE VILEBREQUIN 3	1	1				UR GREEN UR GREEN
	67F–11418–10	PLANE BEARING, CRANKSHAFT 3 COUSSINET DE VILEBREQUIN 3	1	1				UR BLUE UR BLUE
	67F–11418–20	PLANE BEARING, CRANKSHAFT 3 COUSSINET DE VILEBREQUIN 3	1	1				UR RED UR RED
7	67F–11640–00	PISTON/CON-ROD ASSY(STD) PISTON/BIELLE COMPLETTE(STD)	4	4				
	67F–11640–10	PISTON/CON-ROD ASSY(0.25MM OS) PISTON/BIELLE COMPLETTE:0.25MM	4	4				AP AP
8	67F–11654–00	.BOLT, CONNECTING ROD .BOULON, BIELLE	2	2				
9	67F–11603–01	PISTON RING SET (STD) JEU DE SEGMENTS (STD)	4	4				
	67F–11604–01	PISTON RING SET (0.25MM O/S) JUE DE SEGMENTS (0.25MM O/S)	4	4				AP AP
10	67F–11656–00	PLANE BEARING, CONNECTING ROD ROULEMENT DE BIELLE	8	8				UR YELLOW UR YELLOW
	67F–11656–10	PLANE BEARING, CONNECTING ROD ROULEMENT DE BIELLE	8	8				UR GREEN UR GREEN
	67F–11656–20	PLANE BEARING, CONNECTING ROD ROULEMENT DE BIELLE	8	8				UR BLUE UR BLUE
	67F–11656–30	PLANE BEARING, CONNECTING ROD ROULEMENT DE BIELLE	8	8				UR RED UR RED

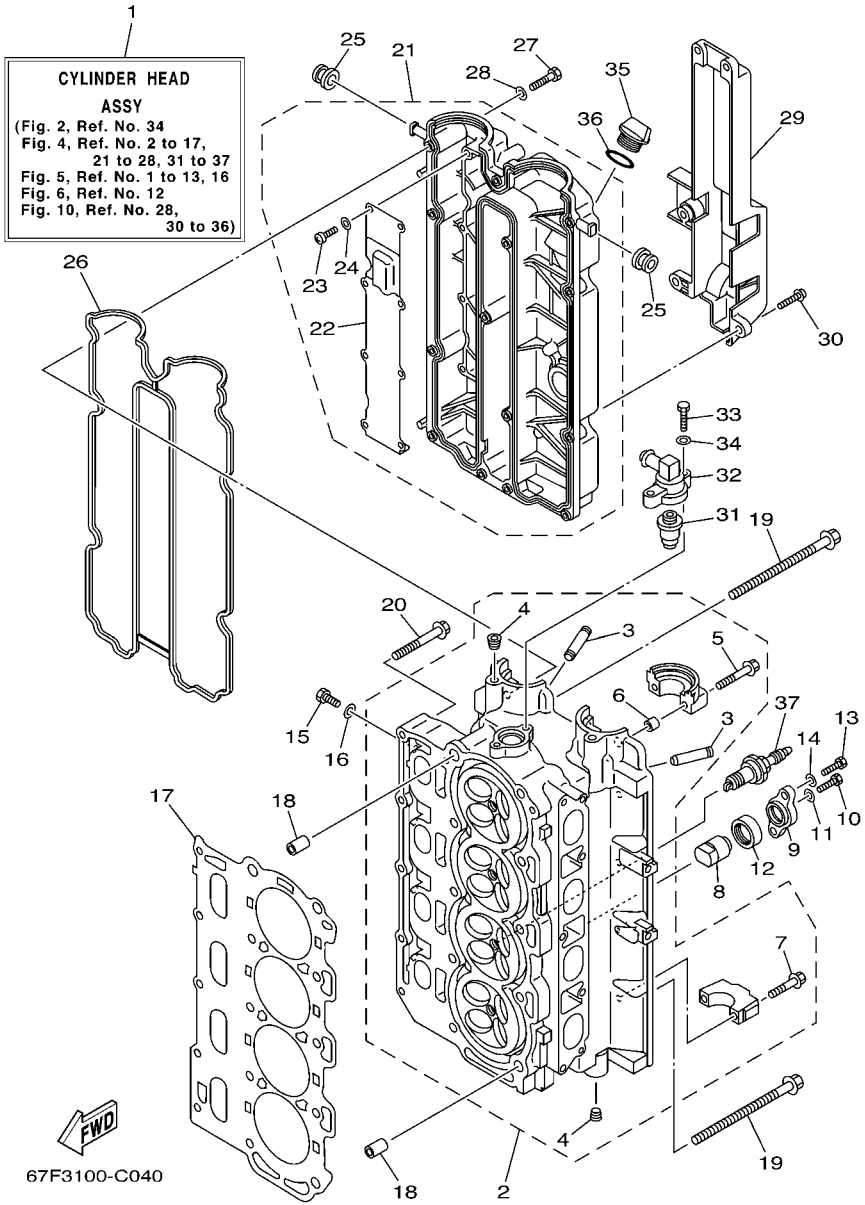

FIG. 4 CYLINDER & CRANKCASE 2 CYLINDRE & CARTER 2

REF. NO.	PART NO. N° PIECES	DESCRIPTION DESCRIPTION	F80	F100				REMARKS REMARQUES
1	67F–W009A–21–1S	CYLINDER HEAD ASSY CULASSE (ENS.)	1	1				
2	67F–11110–11–94	CYLINDER HEAD ASSY JEU DE CULASSE	1	1				
3	67F–11133–10	.GUIDE, VALVE 1 .GUIDE, SOUPAPE 1	16	16				
4	90344–51019	.PLUG, TAPER SCREW .PLOT, FILETE CONIQUE	4	4				
5	90119–07235	.BOLT, WITH WASHER .BOULON, AVEC RONDELLE	4	4				
6	91809–08006	.PIN, DOWEL .GOUJON, D'ASSEMBLAGE	4	4				
7	90119–07234	.BOLT, WITH WASHER .BOULON, AVEC RONDELLE	16	16				
8	68V–11325–00	ANODE ANODE	2	2				
9	67F–11327–00–94	COVER, ANODE COUVERCLE	2	2				
10	97075–06020	BOLT BOULON	2	2				
11	92995–06600	WASHER RONDELLE	2	2				
12	67F–11328–00	GROMMET, ANODE PASSE-FIL	2	2				
13	97075–08025	BOLT BOULON	4	4				
14	92995–08600	WASHER RONDELLE	4	4				
15	97095–08014	BOLT BOULON	4	4				
16	90430–08143	GASKET JOINT	4	4				
17	67F–11181–02	GASKET, CYLINDER HEAD 1 JOINT, DE CULASSE 1	1	1				
18	90387–10M08	COLLAR COLLERETTE	2	2				
19	90105–10M89	BOLT, FLANGE BOULON	10	10				
20	90119–08M91	BOLT, WITH WASHER BOULON, AVEC RONDELLE	5	5				
21	68V–11191–00–1S	COVER, CYLINDER HEAD 1 COUVERCLE, CULASSE 1	1	1				
22	67F–11168–00	.COVER, BREATHER .COUVERCLE, RENIFLARD	1	1				
23	98507–04008	.SCREW, PAN HEAD .VIS, TETE TRONCONIQUE	8	8				
24	92907–04600	.WASHER .RONDELLE	8	8				
25	90480–12072	GROMMET PASSE-FIL	2	2				
26	67F–11356–00	SEAL, CYLINDER 2 JOINT, SPY CYLINDRE	1	1				
27	97095–06030	BOLT BOULON	14	14				

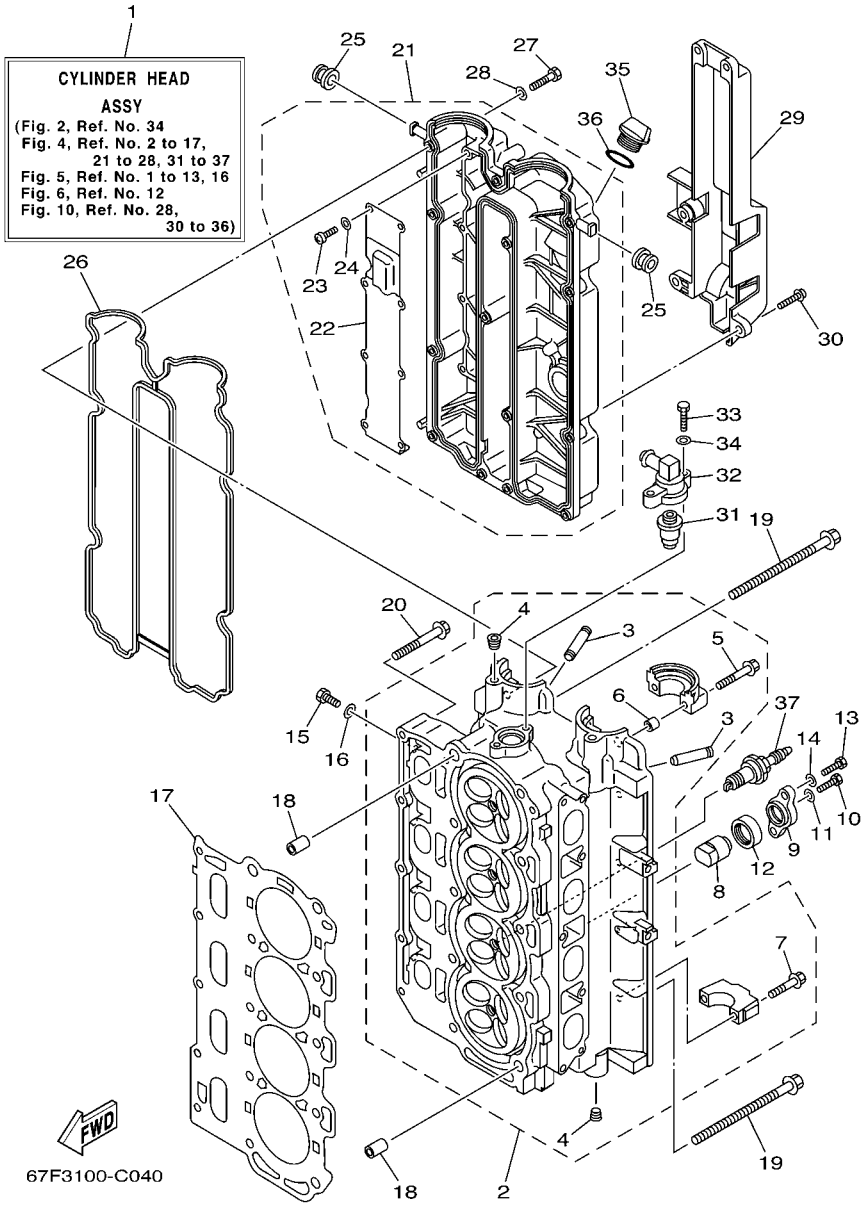

FIG. 4 CYLINDER & CRANKCASE 2 CYLINDRE & CARTER 2

REF. NO.	PART NO. N° PIECES	DESCRIPTION DESCRIPTION	F80	F100				REMARKS REMARQUES
28	92995–06600	WASHER RONDELLE	14	14				
29	67F–11192–00	COVER, CYLINDER HEAD 2 COUVERCLE, CULASSE 2	1	1				
30	90159–06M29	SCREW, WITH WASHER VIS, AVEC RONDELLE	5	5				
31	67F–12411–00	THERMOSTAT THERMOSTAT	1	1				
32	68V–12413–00–1S	COVER, THERMOSTAT COUVERCLE, THERMOSTAT	1	1				
33	97095–06025	BOLT BOULON	2	2				
34	92995–06600	WASHER RONDELLE	2	2				
35	6G8–15363–00	PLUG, OIL PLOT, HUILE	1	1				
36	93210–24M79	O-RING JOINT TORIQUE	1	1				
37	94702–00391	PLUG, SPARK (NGK LFR5A-11) BOUGIE D'ALLUMAGE(NGK LFR5A-11)	4	4				

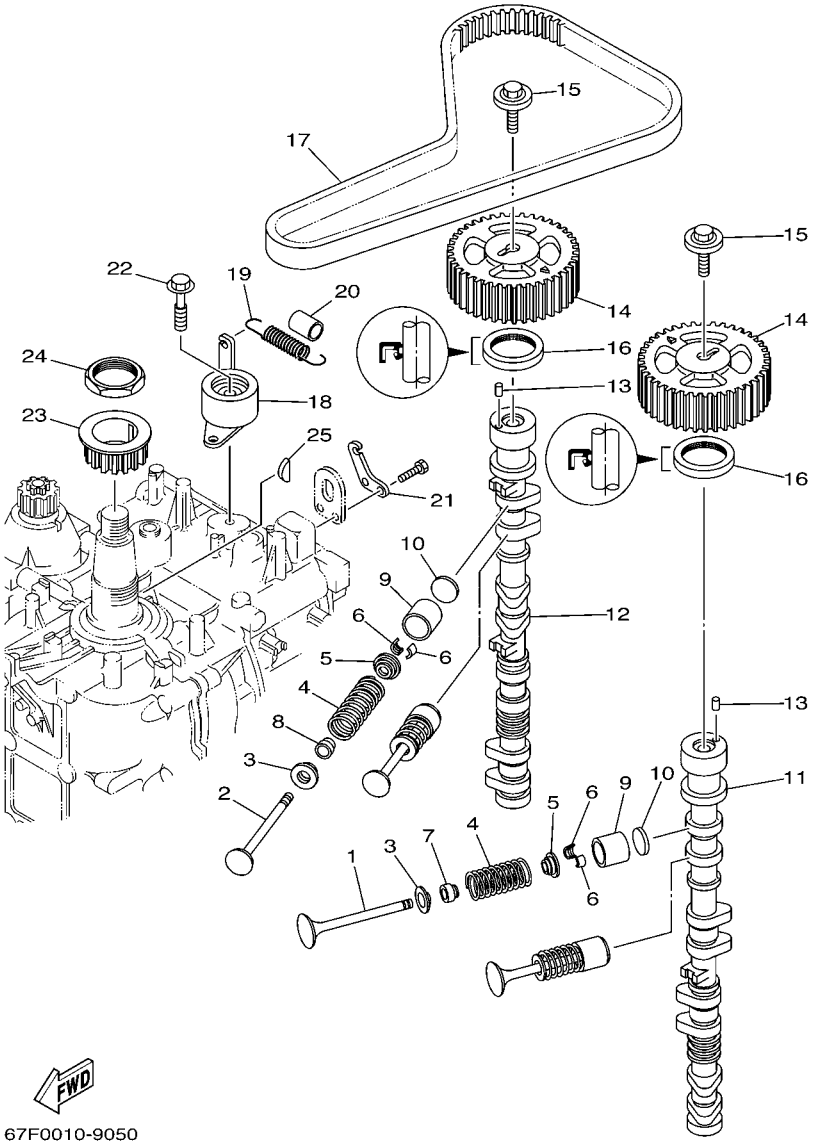

FIG. 5 VALVE SOUPAPE

REF. NO.	PART NO. N° PIECES	DESCRIPTION DESCRIPTION	F80	F100				REMARKS REMARQUES
1	68V–12111–00	VALVE, INTAKE SOUPAPE, ADMISSION	8	8				
2	68V–12121–00	VALVE, EXHAUST SOUPAPE, ECHAPPEMENT	8	8				
3	67F–12116–00	SEAT, VALVE SPRING SIEGE, RESSORT DE SOUPAPE	16	16				
4	67F–12114–00	SPRING, VALVE OUTER RESSORT DE SOUPAPE, EXTERNE	16	16				
5	67F–12117–00	RETAINER, VALVE SPRING BUTEE DE RESSORT DE SOUPAPE	16	16				
6	67F–12118–00	COTTER, VALVE FRAISE, SOUPAPE	32	32				
7	K0A–A3721–00	SEAL, VALVE STEM JOINT, QUEUE DE SOUPAPE	8	8				
8	K0A–A3722–00	SEAL, VALVE STEM 2 JOINT, QUEUE DE SOUPAPE 2	8	8				
9	67F–12153–00	LIFTER, VALVE LEVE-SOUPAPE	16	16				
10	67F–12168–00	PAD, ADJUSTING (2.000) PASTILLE, DE REGLAGE (2.000)	16	16				UR UR
	67F–12168–10	PAD, ADJUSTING (2.025) PASTILLE, DE REGLAGE (2.025)	16	16				UR UR
	67F–12168–20	PAD, ADJUSTING (2.050) PASTILLE, DE REGLAGE (2.050)	16	16				UR UR
	67F–12168–30	PAD, ADJUSTING (2.075) PASTILLE, DE REGLAGE (2.075)	16	16				UR UR
	67F–12168–40	PAD, ADJUSTING (2.100) PASTILLE, DE REGLAGE (2.100)	16	16				UR UR
	67F–12168–50	PAD, ADJUSTING (2.125) PASTILLE, DE REGLAGE (2.125)	16	16				UR UR
	67F–12168–60	PAD, ADJUSTING (2.150) PASTILLE, DE REGLAGE (2.150)	16	16				UR UR
	67F–12168–70	PAD, ADJUSTING (2.175) PASTILLE, DE REGLAGE (2.175)	16	16				UR UR
	67F–12168–80	PAD, ADJUSTING (2.200) PASTILLE, DE REGLAGE (2.200)	16	16				UR UR
	67F–12168–A0	PAD, ADJUSTING (2.225) PASTILLE, DE REGLAGE (2.225)	16	16				UR UR
	67F–12168–B0	PAD, ADJUSTING (2.250) PASTILLE, DE REGLAGE (2.250)	16	16				UR UR
	67F–12168–C0	PAD, ADJUSTING (2.275) PASTILLE, DE REGLAGE (2.275)	16	16				UR UR
	67F–12168–D0	PAD, ADJUSTING (2.300) PASTILLE, DE REGLAGE (2.300)	16	16				UR UR
	67F–12168–E0	PAD, ADJUSTING (2.325) PASTILLE, DE REGLAGE (2.325)	16	16				UR UR
	67F–12168–F0	PAD, ADJUSTING (2.350) PASTILLE, DE REGLAGE (2.350)	16	16				UR UR
	67F–12168–G0	PAD, ADJUSTING (2.375) PASTILLE, DE REGLAGE (2.375)	16	16				UR UR
	67F–12168–H0	PAD, ADJUSTING (2.400) PASTILLE, DE REGLAGE (2.400)	16	16				UR UR
	67F–12168–J0	PAD, ADJUSTING (2.425) PASTILLE, DE REGLAGE (2.425)	16	16				UR UR

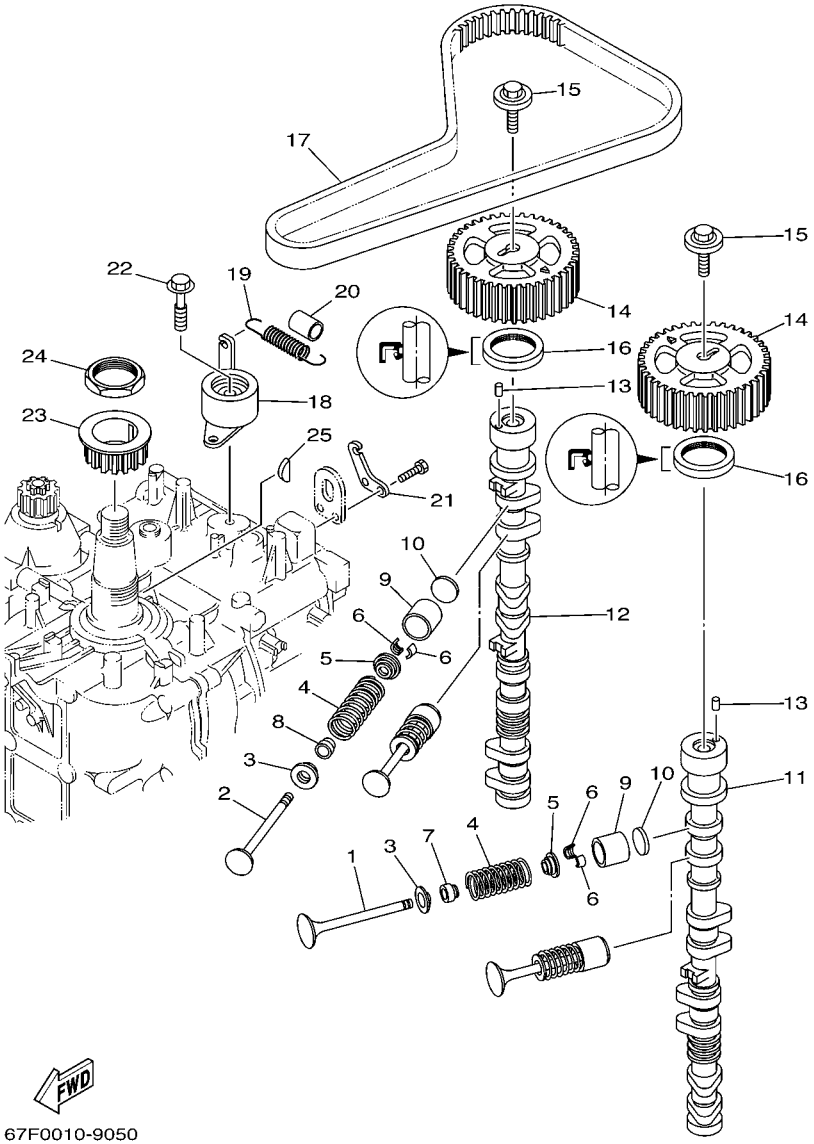

FIG. 5 VALVE SOUPAPE

REF. NO.	PART NO. N° PIECES	DESCRIPTION DESCRIPTION	F80	F100				REMARKS REMARQUES
10	67F–12168–K0	PAD, ADJUSTING (2.450) PASTILLE, DE REGLAGE (2.450)	16	16				UR UR
	67F–12168–L0	PAD, ADJUSTING (2.475) PASTILLE, DE REGLAGE (2.475)	16	16				UR UR
	67F–12168–M0	PAD, ADJUSTING (2.500) PASTILLE, DE REGLAGE (2.500)	16	16				UR UR
	67F–12168–N0	PAD, ADJUSTING (2.525) PASTILLE, DE REGLAGE (2.525)	16	16				UR UR
	67F–12168–P0	PAD, ADJUSTING (2.550) PASTILLE, DE REGLAGE (2.550)	16	16				UR UR
	67F–12168–R0	PAD, ADJUSTING (2.575) PASTILLE, DE REGLAGE (2.575)	16	16				UR UR
	67F–12168–S0	PAD, ADJUSTING (2.600) PASTILLE, DE REGLAGE (2.600)	16	16				UR UR
	67F–12168–T0	PAD, ADJUSTING (2.625) PASTILLE, DE REGLAGE (2.625)	16	16				UR UR
	67F–12168–U0	PAD, ADJUSTING (2.650) PASTILLE, DE REGLAGE (2.650)	16	16				UR UR
	67F–12168–V0	PAD, ADJUSTING (2.675) PASTILLE, DE REGLAGE (2.675)	16	16				UR UR
	67F–12168–W0	PAD, ADJUSTING (2.700) PASTILLE, DE REGLAGE (2.700)	16	16				UR UR
	67F–12168–X0	PAD, ADJUSTING (2.725) PASTILLE, DE REGLAGE (2.725)	16	16				UR UR
	67F–12168–Y0	PAD, ADJUSTING (2.750) PASTILLE, DE REGLAGE (2.750)	16	16				UR UR
	67F–12169–00	PAD, ADJUSTING (2.775) PASTILLE, DE REGLAGE (2.775)	16	16				UR UR
	67F–12169–10	PAD, ADJUSTING (2.800) PASTILLE, DE REGLAGE (2.800)	16	16				UR UR
	67F–12169–20	PAD, ADJUSTING (2.825) PASTILLE, DE REGLAGE (2.825)	16	16				UR UR
	67F–12169–30	PAD, ADJUSTING (2.850) PASTILLE, DE REGLAGE (2.850)	16	16				UR UR
	67F–12169–40	PAD, ADJUSTING (2.875) PASTILLE, DE REGLAGE (2.875)	16	16				UR UR
	67F–12169–50	PAD, ADJUSTING (2.900) PASTILLE, DE REGLAGE (2.900)	16	16				UR UR
	67F–12169–60	PAD, ADJUSTING (2.925) PASTILLE, DE REGLAGE (2.925)	16	16				UR UR
	67F–12169–70	PAD, ADJUSTING (2.950) PASTILLE, DE REGLAGE (2.950)	16	16				UR UR
	67F–12169–80	PAD, ADJUSTING (2.975) PASTILLE, DE REGLAGE (2.975)	16	16				UR UR
	67F–12169–A0	PAD, ADJUSTING (3.000) PASTILLE, DE REGLAGE (3.000)	16	16				UR UR
	67F–12169–B0	PAD, ADJUSTING (3.025) PASTILLE, DE REGLAGE (3.025)	16	16				UR UR
	67F–12169–C0	PAD, ADJUSTING (3.050) PASTILLE, DE REGLAGE (3.050)	16	16				UR UR
	67F–12169–D0	PAD, ADJUSTING (3.075) PASTILLE, DE REGLAGE (3.075)	16	16				UR UR
	67F–12169–E0	PAD, ADJUSTING (3.100) PASTILLE, DE REGLAGE (3.100)	16	16				UR UR

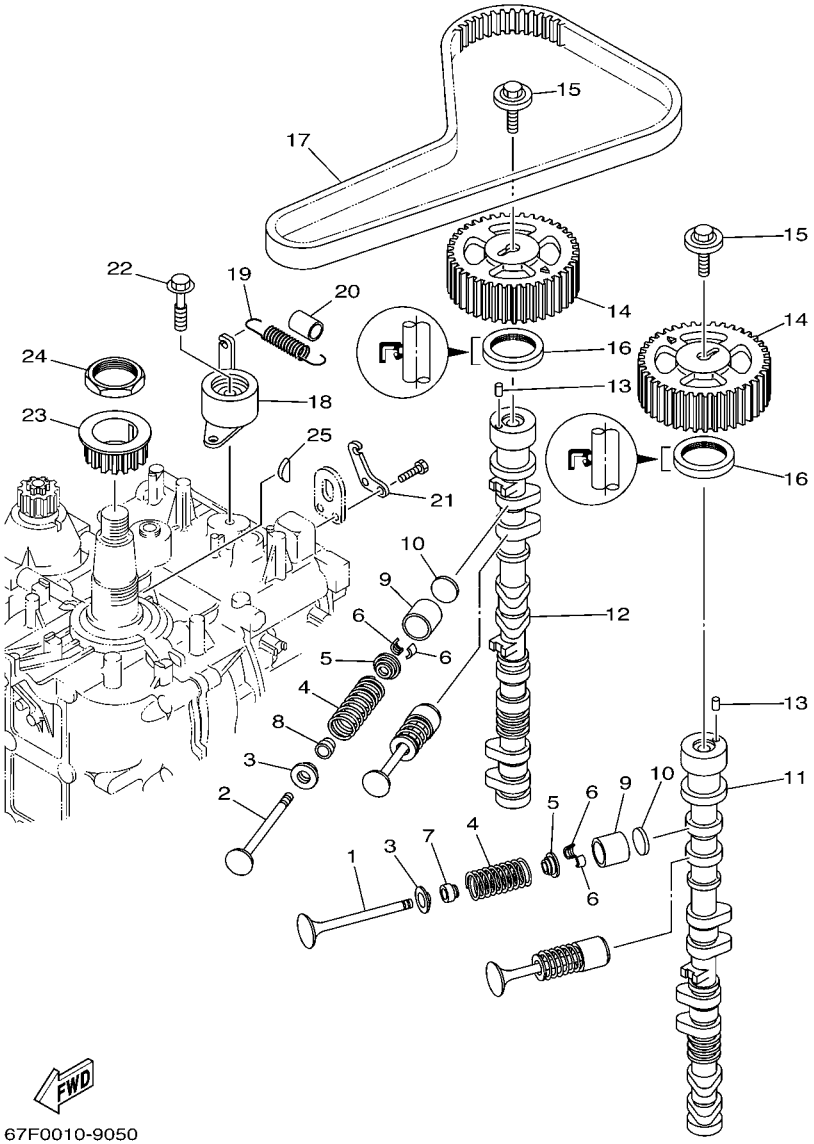

FIG. 5 VALVE SOUPAPE

REF. NO.	PART NO. N° PIECES	DESCRIPTION DESCRIPTION	F80	F100				REMARKS REMARQUES
10	67F–12169–F0	PAD, ADJUSTING (3.125) PASTILLE, DE REGLAGE (3.125)	16	16				UR UR
	67F–12169–G0	PAD, ADJUSTING (3.150) PASTILLE, DE REGLAGE (3.150)	16	16				UR UR
	67F–12169–H0	PAD, ADJUSTING (3.175) PASTILLE, DE REGLAGE (3.175)	16	16				UR UR
	67F–12169–J0	PAD, ADJUSTING (3.200) PASTILLE, DE REGLAGE (3.200)	16	16				UR UR
	67F–12169–K0	PAD, ADJUSTING (3.225) PASTILLE, DE REGLAGE (3.225)	16	16				UR UR
	67F–12169–L0	PAD, ADJUSTING (3.250) PASTILLE, DE REGLAGE (3.250)	16	16				UR UR
	67F–12169–M0	PAD, ADJUSTING (3.275) PASTILLE, DE REGLAGE (3.275)	16	16				UR UR
	67F–12169–N0	PAD, ADJUSTING (3.300) PASTILLE, DE REGLAGE (3.300)	16	16				UR UR
11	67F–12171–00	CAMSHAFT 1 ARBRE A CAMES 1	1	1				
12	67F–12181–00	CAMSHAFT 2 ARBRE A CAMES 2	1	1				
13	93605–10108	PIN, DOWEL AXE	2	2				
14	67F–11537–00	GEAR, DRIVEN PIGNON SECONDAIRE	2	2				
15	90119–10M06	BOLT, WITH WASHER BOULON, AVEC RONDELLE	2	2				
16	93102–38M59	OIL SEAL JOINT SPY	2	2				
17	67F–46241–00	BELT COURROIE TRAPEZOIDALE	1	1				
18	67F–11590–00	TENSIONER ASSY TENDEUR (ENS.)	1	1				
19	90506–16M39	SPRING, TENSION RESSORT, TENSION	1	1				
20	90445–15M03	HOSE (L23) DURITE (L23)	1	1				
21	67F–11595–00	PLATE,VALVE PLAQUE DE SOUPAPE	1	1				
22	90119–10M72	BOLT, WITH WASHER BOULON, AVEC RONDELLE	1	1				
23	67F–11536–00	GEAR, DRIVE ENGRENAGE, MENANT	1	1				
24	90170–40003	NUT ECROU	1	1				
25	90280–04008	KEY, WOODRUFF CLAVETTE, DEMI-LUNE	1	1				

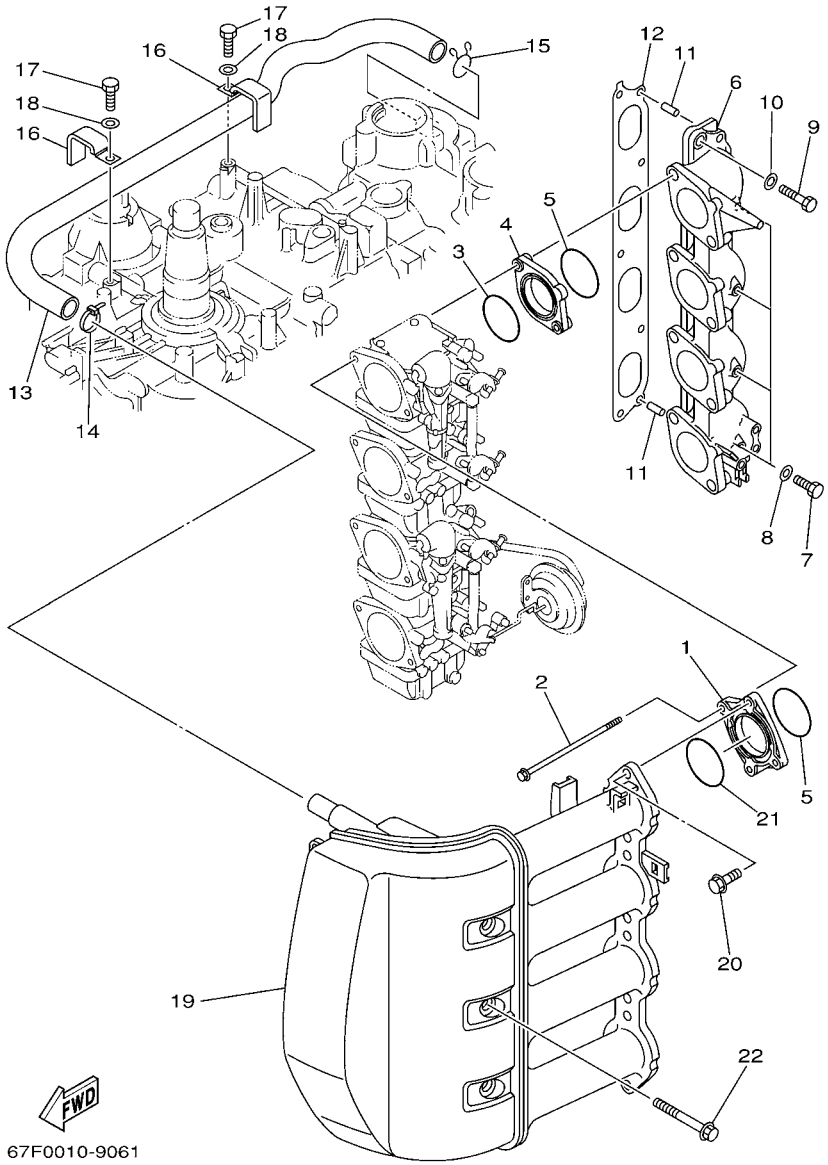

FIG. 6 INTAKE — ADMISSION

REF. NO.	PART NO. N° PIECES	DESCRIPTION DESCRIPTION	F80	F100				REMARKS REMARQUES
1	67F–14243–00	PLATE PLAQUE	4	4				
2	67F–14216–00	BOLT BOULON	8	8				
3	67F–14239–00	SEAL JOINT	4	4				
4	67F–14271–00	INSULATOR ISOLATEUR	4	4				
5	93210–40M10	O-RING JOINT TORIQUE	8	8				
6	67F–13641–00–94	MANIFOLD 1 TUBULURE 1	1	1				
7	97095–06010	BOLT BOULON	4	4				
8	90430–06014	GASKET JOINT	4	4				
9	97075–08035	BOLT BOULON	5	5				
10	92995–08600	WASHER RONDELLE	5	5				
11	91690–50014	PIN, SPRING AGRAFFE	2	2				
12	67F–13645–00	GASKET, MANIFOLD 1 JOINT, TUBULURE 1	1	1				
13	67F–15373–00	PIPE, BREATHER DURITE DE RENIFLARD	1	1				
14	90465–11M10	CLAMP BRIDE	1	1				
15	90467–20M15	CLIP JONC	1	1				
16	90465–12M03	CLAMP BRIDE	2	2				
17	97095–06012	BOLT BOULON	2	2				
18	92995–06600	WASHER RONDELLE	2	2				
19	67F–14440–00	SILENCER ASSY, INTAKE SIENCIEUX D'ADMISSION	1	1				
20	90119–06M82	BOLT, WITH WASHER BOULON, AVEC RONDELLE	8	8				
21	93210–41MJ2	O-RING JOINT TORIQUE	4	4				
22	90119–08M59	BOLT, WITH WASHER BOULON, AVEC RONDELLE	3	3				

FIG. 7 CARBURETOR 1 CARBURATEUR 1

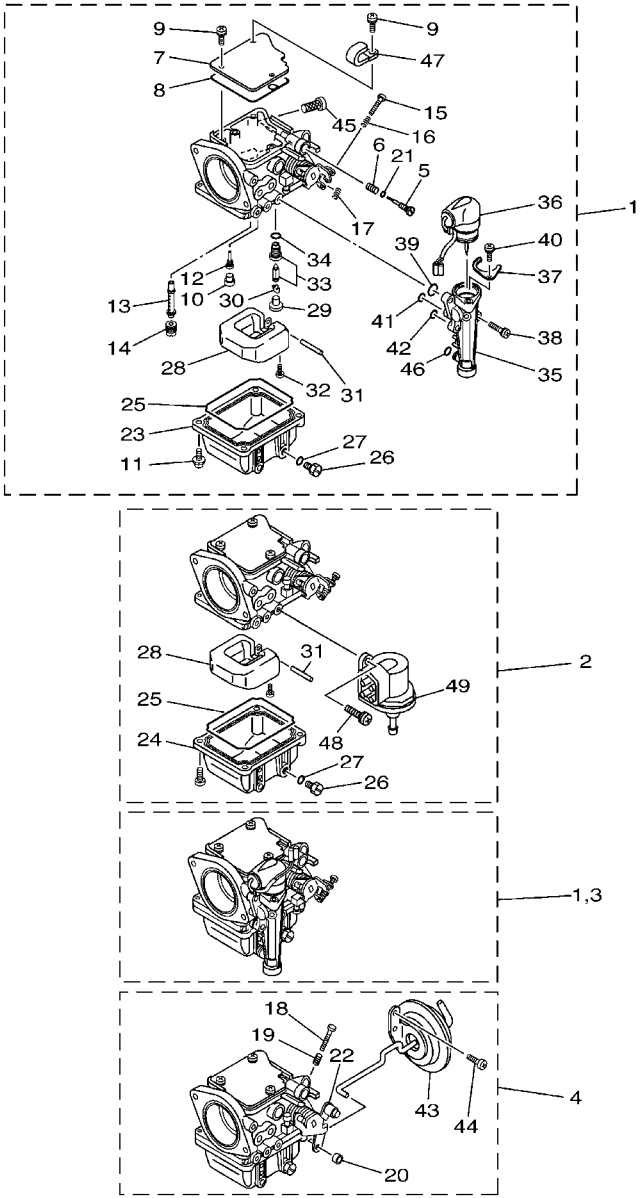

REF. NO.	PART NO. N° PIECES	DESCRIPTION DESCRIPTION	F80	F100				REMARKS REMARQUES
1	67F–14901–20	CARBURETOR ASSY 1 CARBURATEUR 1 COMPLET		1				#1 #1
	67G–14901–30	CARBURETOR ASSY 1 CARBURATEUR 1 COMPLET	2					FOR STD-#1,3 FOR STD-#1,3
	67G–14901–50	CARBURETOR ASSY 1 CARBURATEUR 1 COMPLET	2					FOR SAV-#1,3 FOR SAV-#1,3
2	67F–14902–20	CARBURETOR ASSY 2 CARBURATEUR 2 COMPLET		1				#2 #2
	67G–14902–30	CARBURETOR ASSY 2 CARBURATEUR 2 COMPLET	1					FOR STD-#2 FOR STD-#2
	67G–14902–50	CARBURETOR ASSY 2 CARBURATEUR 2 COMPLET	1					FOR SAV-#2 FOR SAV-#2
3	67F–14903–20	CARBURETOR ASSY 3 CARBURATEUR 3 COMPLET		1				#3 #3
4	67F–14904–20	CARBURETOR ASSY 4 CARBURATEUR 4 COMPLET		1				#4 #4
	67G–14904–30	CARBURETOR ASSY 4 CARBURATEUR 4 COMPLET	1					FOR STD-#4 FOR STD-#4
	67G–14904–50	CARBURETOR ASSY 4 CARBURATEUR 4 COMPLET	1					FOR SAV-#4 FOR SAV-#4
5	67F–14923–00	.SCREW, PILOT .VIS, RALENTI	4	4				FOR STD FOR STD
	67F–14923–10	.SCREW, PILOT .VIS, RALENTI	4					FOR SAV FOR SAV
6	697–14555–00	.SPRING .RESSORT	4	4				
7	67F–14146–00	.PLATE .PLAQUE	4	4				
8	67F–14147–00	.O-RING .JOINT TORIQUE	4	4				
9	97803–04010	.SCREW, PAN HEAD .VIS, CRUCIFORME	12	12				
10	676–14966–00	.CAP .CAPUCHON	4	4				
11	97980–04114	.SCREW, WITH WASHER .VIS, AVEC RONDELLE	16	16				
12	67F–1494F–04	.JET (#42) .GICLEUR (#42)		4				
	67G–14948–05	.JET (#45) .GICLEUR (#45)	4					
13	67F–14947–10	.JET, NEEDLE .GICLEUR DE STARTER		4				
	67G–14947–00	.JET, NEEDLE .GICLEUR DE STARTER	4					
14	67F–14943–32	.JET, MAIN (#125) .GICLEUR, PRINCIPAL (#125)		4				
	67G–14943–80	.JET, MAIN (#112) .GICLEUR, PRINCIPAL (#112)	4					FOR STD FOR STD
	67G–14943–29	.JET, MAIN (#110) .GICLEUR, PRINCIPAL (#110)	4					FOR SAV FOR SAV
15	67F–14567–00	.SCREW .VIS	3	3				#1,2,3 #1,2,3
16	67F–14555–00	.SPRING .RESSORT	3	3				#1,2,3 #1,2,3

FIG. 7 CARBURETOR 1 CARBURATEUR 1

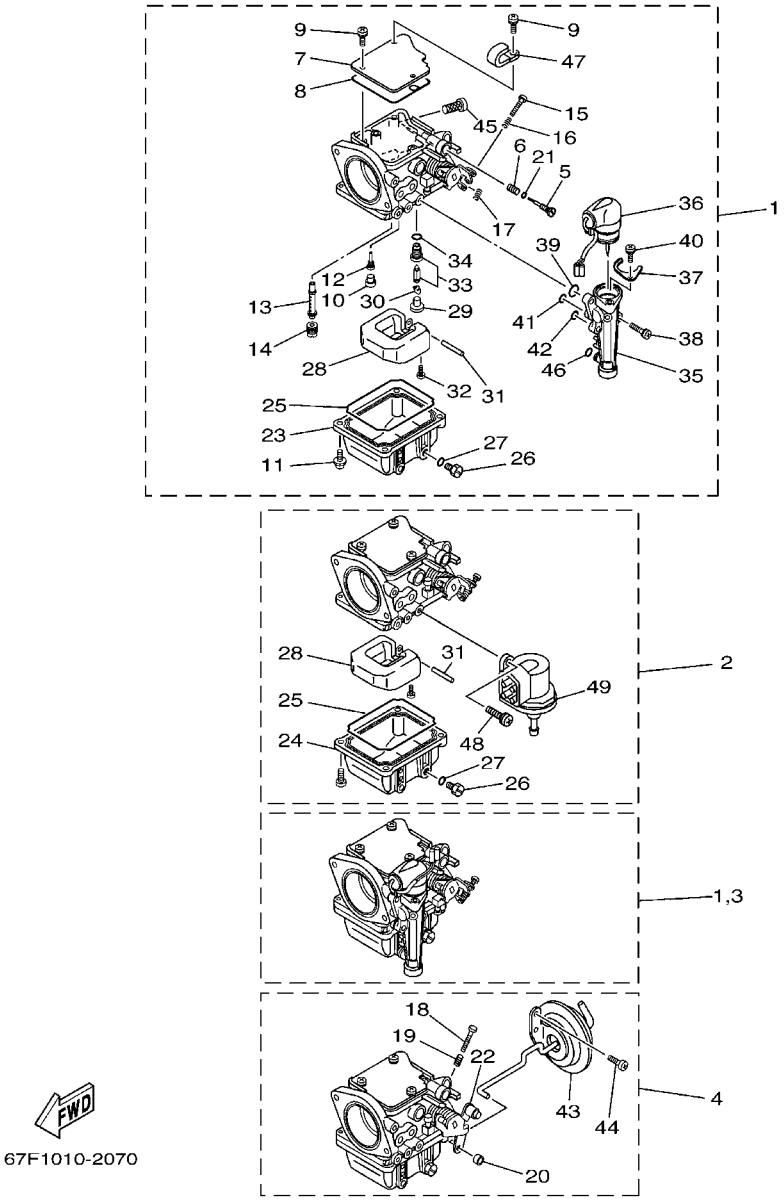

REF. NO.	PART NO. N° PIECES	DESCRIPTION DESCRIPTION	F80	F100				REMARKS REMARQUES
17	67F–14556–00	.SPRING .RESSORT	3	3				#1,2,3 #1,2,3
18	63V–14523–00	.SCREW, STOP .VIS, BUTEE	1	1				#4 #4
19	90501–10326	.SPRING, COMPRESSION .RESSORT, COMPRESSION	1	1				#4 #4
20	67F–14998–00	.BUSH .BAGUE	1	1				#4 #4
21	67F–14397–00	.O-RING .JOINT TORIQUE	4	4				
22	6H2–14578–00	.COLLAR .COLLERETTE	1	1				#4 #4
23	67F–14980–00	.BODY, FLOAT CHAMBER .CORPS, CUVE DE FLOTTEUR	2	2				#1,3 #1,3
24	67F–14980–10	.BODY, FLOAT CHAMBER .CORPS, CUVE DE FLOTTEUR	2	2				#2,4 #2,4
25	67F–14984–00	.GASKET, FLOAT CHAMBER .JOINT, CUVE DE FLOTTEUR	4	4				
26	6H3–14992–00	.SCREW, DRAIN .BOUCHON, PURGE	4	4				
27	93210–04230	.O-RING .JOINT TORIQUE	4	4				
28	6H4–14985–01	.FLOAT .FLOTTEUR	4	4				
29	676–14186–00	.PIN, FLOAT .AXE, FLOTTEUR	4	4				
30	67F–14159–00	.CLIP .JONC	4	4				
31	6H4–14548–00	.PIN, FLOAT ARM .AXE, BRAS DE FLOTTEUR	4	4				
32	98580–04008	.SCREW, PAN HEAD .VIS	4	4				
33	60C–14590–01	.NEEDLE VALVE ASSY .POINTEAU	4	4				
34	93210–04228	.O-RING .JOINT TORIQUE	4	4				
35	67F–14378–00	.BODY, STARTER .CORPS, STARTER	2	2				#1,3 #1,3
36	67F–14380–01	.PRIME STARTER ASSY .DEMARREUR D'AMARCAGE ENS.	2	2				#1,3 #1,3
37	67F–14178–00	.PLATE, STARTER LEVER .PLAQUE, LEVIER DE STARTER	2	2				#1,3 #1,3
38	67F–14592–00	.SCREW .VIS	6	6				#1,3 #1,3
39	67F–14398–00	.O-RING .JOINT TORIQUE	2	2				#1,3 #1,3
40	67F–14565–00	.SCREW .VIS	2	2				#1,3 #1,3
41	67F–14398–10	.O-RING .JOINT TORIQUE	2	2				#1,3 #1,3
42	67F–14398–20	.O-RING .JOINT TORIQUE	2	2				#1,3 #1,3
43	67F–14369–00	.DIAPHRAGM ASSY 2 .DIAPHRAGME 2	1	1				#4 #4

FIG. 7 CARBURETOR 1 CARBURATEUR 1

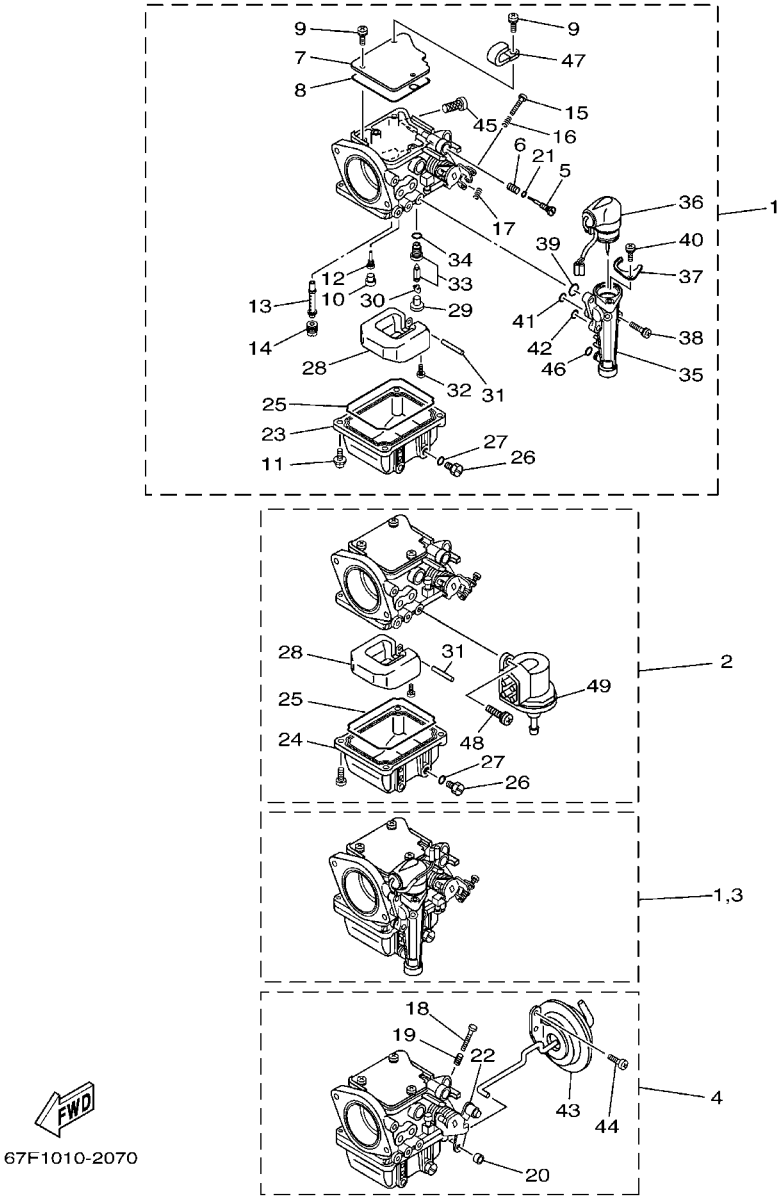

REF. NO.	PART NO. N° PIECES	DESCRIPTION DESCRIPTION	F80	F100				REMARKS REMARQUES
44	67F–14325–00	.SCREW, PAN HEAD .VIS TETE CONIQUE	2	2				#4 #4
45	67F–14371–01	.ELEMENT, FILTER .ELEMENT, FILTRE	4	4				
46	67F–14398–30	.O-RING .JOINT TORIQUE	2	2				#1,3 #1,3
47	67F–14255–00	.PLATE .PLAQUE		1				#1 #1
48	67F–14567–00	.SCREW .VIS		2				#2 #2
49	67F–14860–00	.CHECK VALVE BODY ASSY .SOUPAPE, RETENUE COMPLET		1				#2 #2

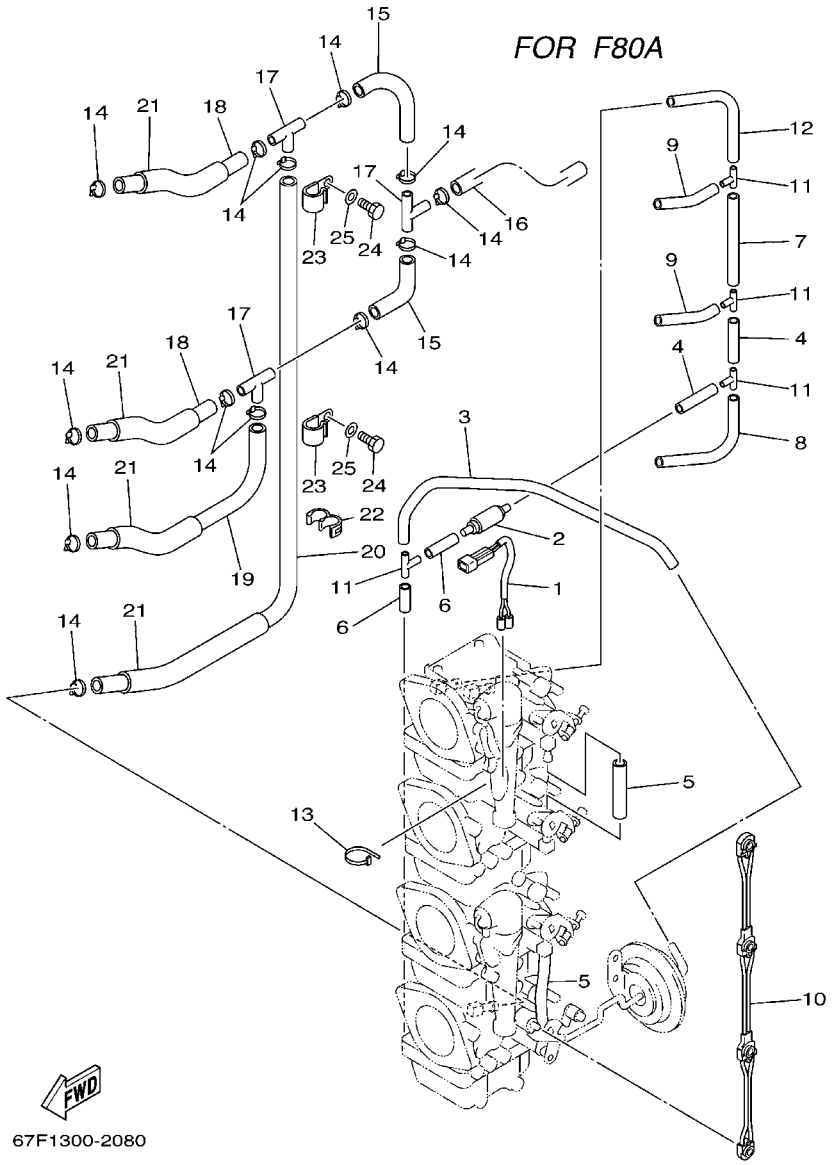

FIG. 8 CARBURETOR 2 — CARBURATEUR 2

REF. NO.	PART NO. N° PIECES	DESCRIPTION DESCRIPTION	F80	F100				REMARKS REMARQUES
1	67F–1412A–00	WIRE HARNESS ASSY FAISCEAU DE FILS COMPLET	1					
2	67F–13183–00	VALVE, CHECK S'OUPAPE DE RATANUE	1					
3	67F–14349–00	PIPE DURITE	1					
4	67F–14349–10	PIPE DURITE	2					
5	67F–14349–20	PIPE DURITE	2					
6	67F–14349–30	PIPE DURITE	2					
7	67F–14349–40	PIPE DURITE	1					
8	67F–14349–50	PIPE DURITE	1					
9	67F–14349–60	PIPE DURITE	2					
10	67F–14585–00	ROD, CHOKE TRINGLE, STARTER	1					
11	67F–14189–00	CONNECTOR CONNECTEUR	4					
12	67F–14349–70	PIPE DURITE	1					
13	90465–11M59	CLAMP BRIDE	1					
14	68F–24356–00	CLIP, PIPE 1 JONC, TUBE 1	13					
15	60C–14294–00	HOSE DURITE	2					
16	60C–14298–00	PIPE DURITE	1					
17	688–24378–00	PIPE, JOINT 4 DURITE RACCORDEMENT 4	3					
18	90445–10M16	HOSE (L120) DURITE (L120)	2					
19	90445–10MG6	HOSE (L180) DURITE (L180)	1					
20	90445–10MG7	HOSE (L350) DURITE (L350)	1					
21	90445–16M07	HOSE (L80) DURITE (L80)	4					
22	90464–10M57	CLAMP BRIDE	1					
23	90465–08M83	CLAMP BRIDE	2					
24	97095–06012	BOLT BOULON	2					
25	92995–06600	WASHER RONDELLE	2					

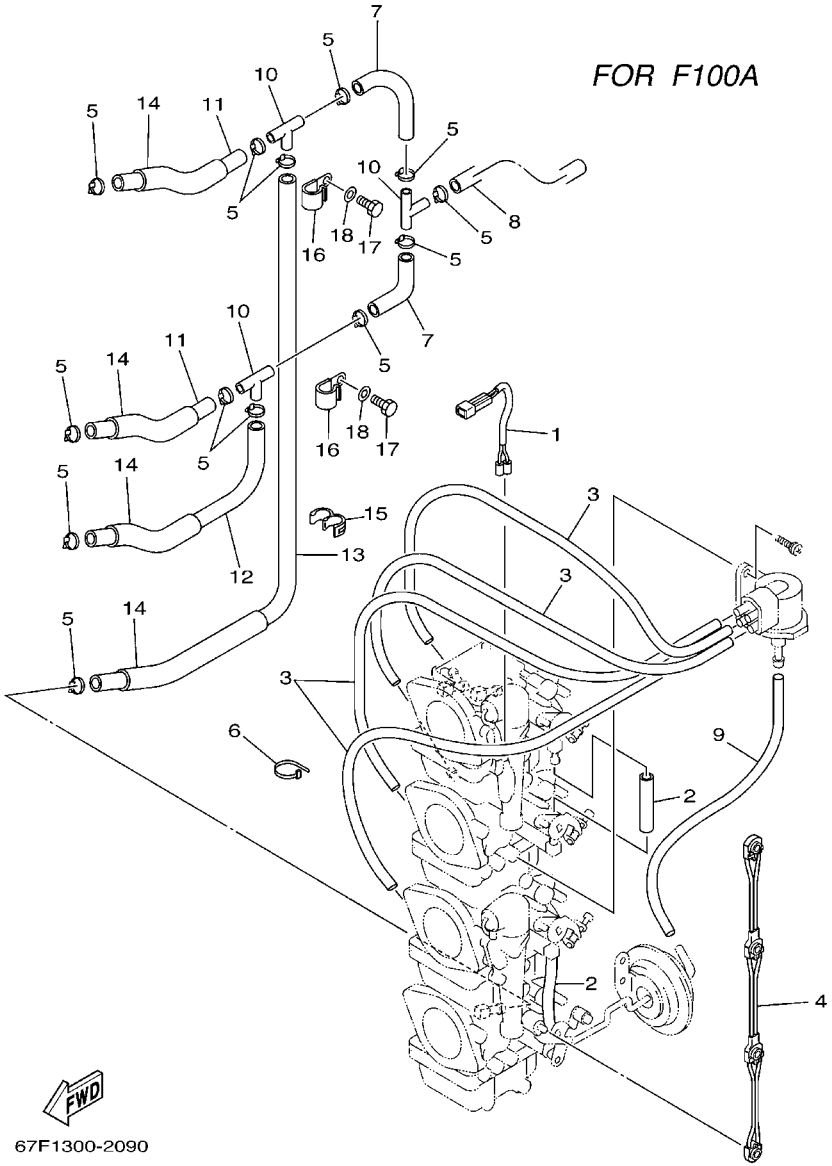

FIG. 9 CARBURETOR 3 — CARBURATEUR 3

REF. NO.	PART NO. N° PIECES	DESCRIPTION DESCRIPTION	F80	F100				REMARKS REMARQUES
1	67F–1412A–00	WIRE HARNESS ASSY FAISCEAU DE FILS COMPLET		1				
2	67F–14349–20	PIPE DURITE		2				
3	67F–14349–00	PIPE DURITE		4				
4	67F–14585–00	ROD, CHOKE TRINGLE, STARTER		1				
5	68F–24356–00	CLIP, PIPE 1 JONC, TUBE 1		13				
6	90465–11M59	CLAMP BRIDE		3				
7	60C–14294–00	HOSE DURITE		2				
8	60C–14298–00	PIPE DURITE		1				
9	67F–14348–00	PIPE 1 DURITE		1				
10	688–24378–00	PIPE, JOINT 4 DURITE RACCORDEMENT 4		3				
11	90445–10M16	HOSE (L120) DURITE (L120)		2				
12	90445–10MG6	HOSE (L180) DURITE (L180)		1				
13	90445–10MG7	HOSE (L350) DURITE (L350)		1				
14	90445–16M07	HOSE (L80) DURITE (L80)		4				
15	90464–10M57	CLAMP BRIDE		1				
16	90465–08M83	CLAMP BRIDE		2				
17	97095–06012	BOLT BOULON		2				
18	92995–06600	WASHER RONDELLE		2				

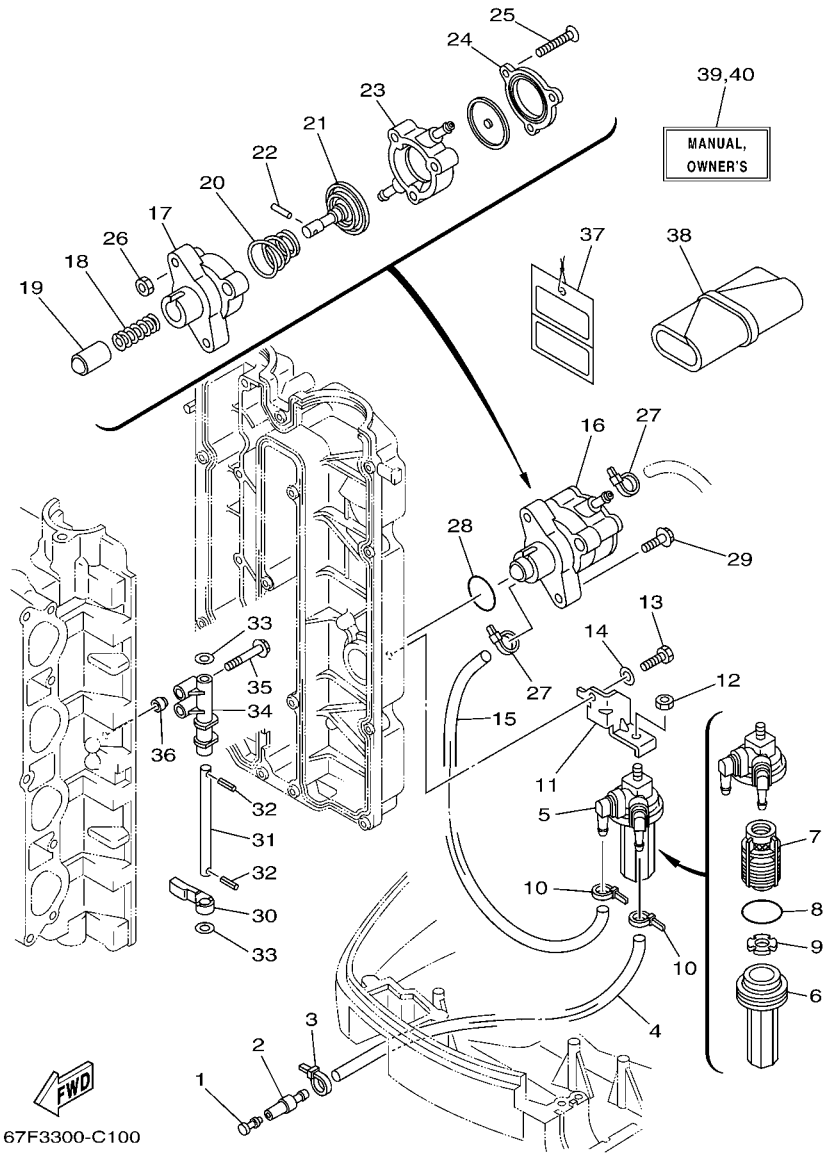

FIG. 10 FUEL 1 — CARBURANT 1

REF. NO.	PART NO. N° PIECES	DESCRIPTION DESCRIPTION	F80	F100				REMARKS REMARQUES
1	689–85547–00	DAMPER AMORTISSEUR	1	1				
2	6R3–24377–00	PIPE, JOINT 3 DURITE RACCORDEMENT 3	1	1				
3	90465–11M10	CLAMP BRIDE	1	1				
4	90445–13M27	HOSE (L950) DURITE (L950)	1	1				
5	60C–24560–00	FILTER ASSY ENS FILTRE	1	1				
6	68V–24521–01	.CUP, FILTER .CUVETTE, FILTRE	1	1				
7	61N–24563–00	.ELEMENT, FILTER .ELEMENT, FILTRE	1	1				
8	93210–32738	.O-RING .JOINT TORIQUE	1	1				
9	68V–24469–01	.FLOAT, WATER LEVEL .FLOTTEUR	1	1				
10	90465–11M10	CLAMP BRIDE	2	2				
11	68V–24566–00	BRACKET, FILTER SUPPORT, FILTRE	1	1				
12	95380–08600	NUT ECROU	1	1				
13	97095–06016	BOLT BOULON	1	1				
14	92995–06600	WASHER RONDELLE	1	1				
15	90445–13M11	HOSE (L300) DURITE (L300)	1	1				
16	68V–24410–00	FUEL PUMP ASSY POMPE A ESSENCE	1	1				
17	68V–24412–00	.BODY 1 .CORPS 1	1	1				
18	68V–24454–00	.SPRING .RESSORT	1	1				
19	68V–13131–00	.PLUNGER .PLONGEUR	1	1				
20	68V–24423–00	.SPRING, DIAPHRAGM .RESSORT, DIAPHRAGME	1	1				
21	68V–24411–00	.DIAPHRAGM .DIAPHRAGME	1	1				
22	68V–24374–00	.PIN .GOUPILLE	1	1				
23	68V–24413–00	.BODY 2 .CORPS 2	1	1				
24	68V–24414–00	.BODY 3 .CORPS 3	1	1				
25	68V–24444–00	.SCREW .VIS	3	3				
26	68V–24149–00	.NUT .ECROU	3	3				
27	90465–11M10	CLAMP BRIDE	2	2				

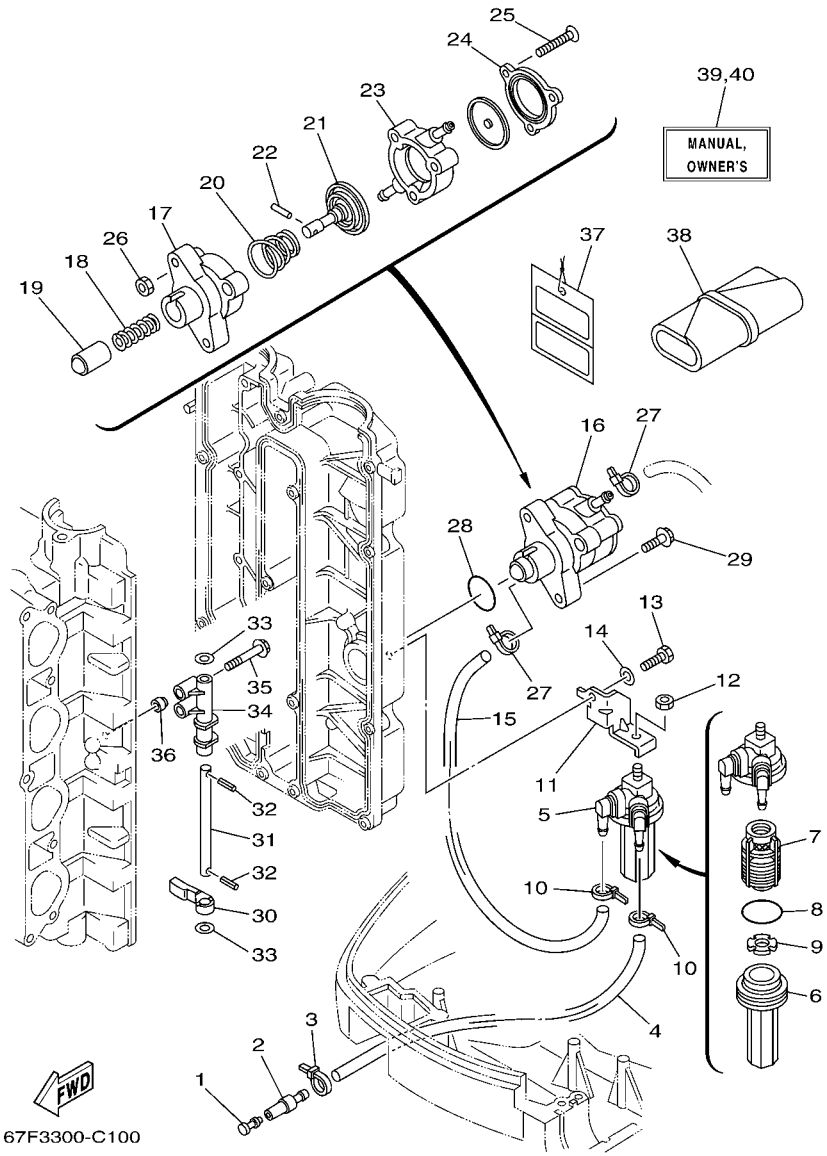

FIG. 10 FUEL 1 — CARBURANT 1

REF. NO.	PART NO. N° PIECES	DESCRIPTION DESCRIPTION	F80	F100				REMARKS REMARQUES
28	93210–30682	O-RING JOINT TORIQUE	1	1				
29	90119–06M83	BOLT, WITH WASHER BOULON, AVEC RONDELLE	2	2				
30	67F–24575–00	LEVER, FUEL CHANGE LEVIER, D'ESSENCE	1	1				
31	68V–24495–00	SHAFT AXE	1	1				
32	91609–25014	PIN, SPRING AXE DE RESSORT	2	2				
33	90201–08M12	WASHER, PLATE RONDELLE, PLATE	2	2				
34	67F–24491–00	BRACKET, FUEL PUMP SUPPORT, POMPE A ESSENCE	1	1				
35	90119–07235	BOLT, WITH WASHER BOULON, AVEC RONDELLE	2	2				
36	91809–08006	PIN, DOWEL GOUJON, D'ASSEMBLAGE	2	2				
37	61H–2819R–31	TAG, WARNING ETIQUETTE, AVERTISSEMENT	1	1				
38	67F–28100–01	TOOL KIT TROUSSE A OUTILS	1	1				
39	67F–28199–77–A0	MANUAL,OWNER'S MANUEL D'UTILISATION	1	1				UR (E,F,S) UR (E,F,S)
	67F–28199–77–B0	MANUAL,OWNER'S MANUEL D'UTILISATION	1	1				UR (D,NL,I) UR (D,NL,I)
40	67F–28199–88–A0	MANUAL,OWNER'S MANUEL D'UTILISATION	1	1				UR (DK,P,GR) UR (DK,P,GR)
	67F–28199–88–B0	MANUAL,OWNER'S MANUEL D'UTILISATION	1	1				UR (N,S,SS) UR (N,S,SS)

FIG. 11 FUEL 2 — CARBURANT 2

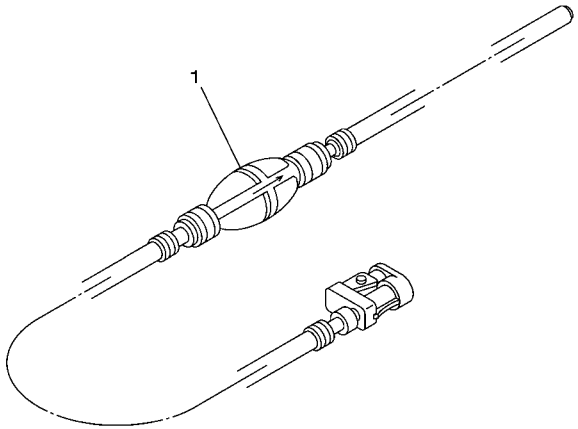

67F3300-C110

REF. NO.	PART NO. N° PIECES	DESCRIPTION DESCRIPTION	F80	F100				REMARKS REMARQUES
1	6YK–24306–43	FUEL PIPE COMP. 1 DURITE A ESSENCE 1		1				AP AP

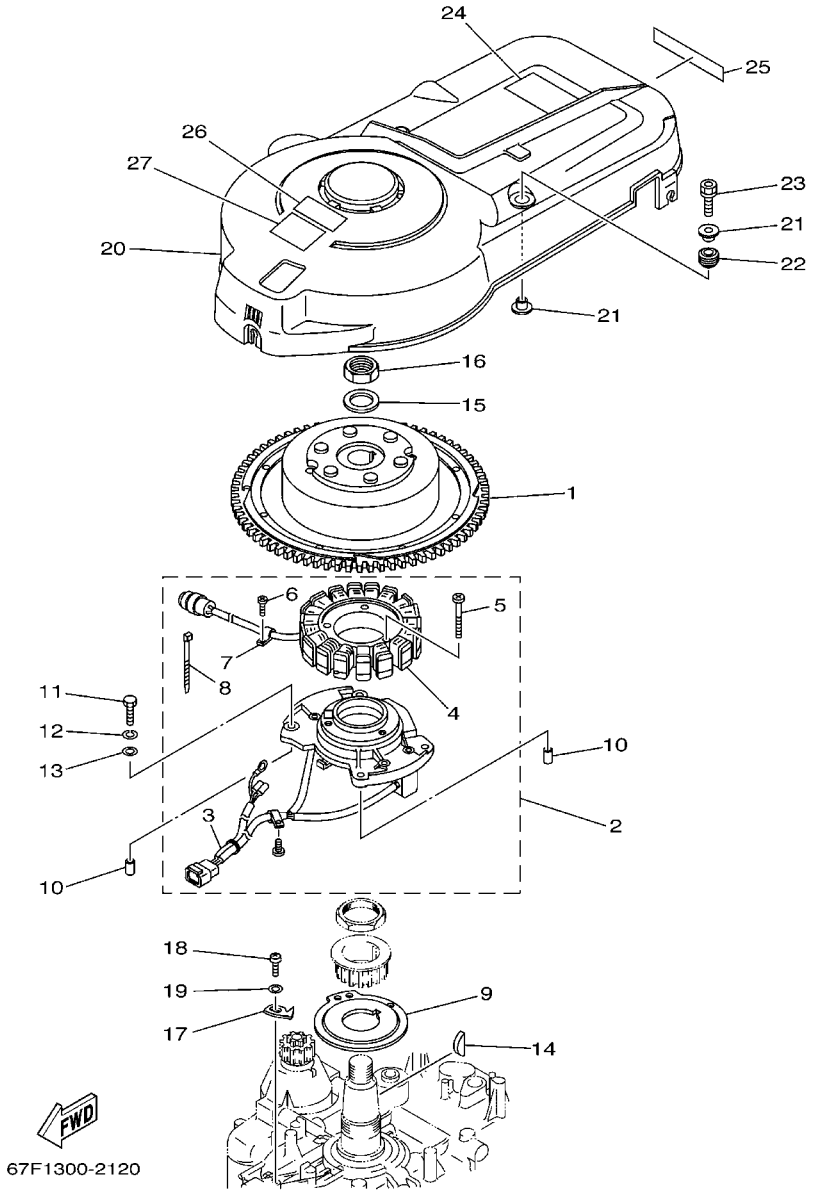

FIG. 12 GENERATOR GENERATRICE

REF. NO.	PART NO. N° PIECES	DESCRIPTION DESCRIPTION	F80	F100				REMARKS REMARQUES
1	67F–85550–00	ROTOR ASSY ROTOR CPLT	1	1				
2	67F–85560–01	BASE ASSY ENS. FLASQUE	1	1				
3	67F–85580–00	.COIL, PULSER .BOBINE, PULSEUR	1	1				
4	67F–85510–01	.STATOR ASSY .STATOR CPLT	1	1				
5	63D–81345–20	.SCREW, WITH WASHER (M6X30) .VIS, AVEC RONDELLE (M6X30)	3	3				
6	97607–04110	.SCREW,WITH WASHER .VIS HEXAGONAL	1	1				
7	445–81328–20	.CLAMP .COLLIER	1	1				
8	66T–81328–00	.CLAMP .COLLIER	1	1				
9	67F–81673–00	ROTOR ROTOR	1	1				
10	99530–08012	PIN, DOWEL GOUJON, D'ASSEMBLAGE	2	2				
11	97095–06030	BOLT BOULON	4	4				
12	92995–06100	WASHER, SPRING RONDELLE, GROWER	4	4				
13	92995–06600	WASHER RONDELLE	4	4				
14	90280–05015	KEY, WOODRUFF CLAVETTE, DEMI-LUNE	1	1				
15	90201–24014	WASHER, PLATE RONDELLE, PLATE	1	1				
16	90179–24002	NUT ECROU	1	1				
17	67F–81332–00	PLATE, TIMING PLATEAU, ALLUMAGE	1	1				
18	97885–06010	SCREW, PAN HEAD VIS, A ENCOCHE	1	1				
19	92995–06600	WASHER RONDELLE	1	1				
20	67F–81337–01	COVER, FLYWHEEL COUVERCLE, VOLANT	1	1				
21	90387–06M71	COLLAR COLLERETTE	4	4				
22	90480–15M31	GROMMET PASSE-FIL	2	2				
23	90119–06M92	BOLT, WITH WASHER BOULON, AVEC RONDELLE	2	2				
24	67F–12138–60	MARK, CAUTION MAKER	1	1				
25	68V–13437–60	MARK, CAUTION MAKER	1	1				
26	6A1–83625–41	MARK 5 ETIQUETTE 5	1	1				
27	6A1–83625–51	MARK 5 ETIQUETTE 5	1	1				

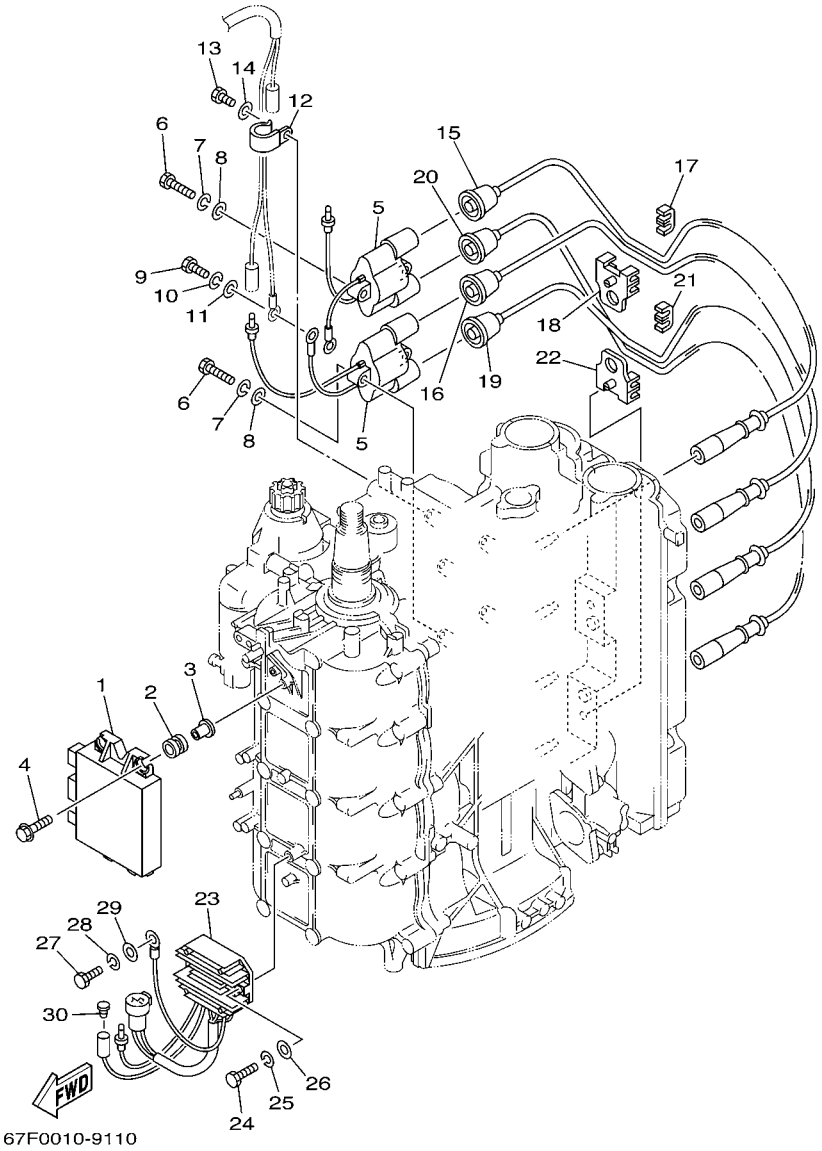

FIG. 13 ELECTRICAL 1 — PARTIE ELECTRIQUE 1

REF. NO.	PART NO. N° PIECES	DESCRIPTION DESCRIPTION	F80	F100				REMARKS REMARQUES
1	67F–85540–02	C.D.I. UNIT ASSY BLOC C.D.I.	1	1				
2	68V–82317–00	DAMPER, IGNITION COIL AMORTISSEUR, BOBINE D'ALLUM	4	4				
3	624–42542–00	PIPE TUYAU	4	4				
4	90119–06M59	BOLT, WITH WASHER BOULON, AVEC RONDELLE	4	4				
5	67F–85570–00	IGNITION COIL ASSY BOBINE D'ALLUMAGE (ENS.)	2	2				
6	97095–06030	BOLT BOULON	4	4				
7	92995–06100	WASHER, SPRING RONDELLE, GROWER	4	4				
8	92995–06600	WASHER RONDELLE	4	4				
9	97095–06020	BOLT BOULON	1	1				
10	92995–06100	WASHER, SPRING RONDELLE, GROWER	1	1				
11	92995–06600	WASHER RONDELLE	1	1				
12	90465–06M86	CLAMP BRIDE	1	1				
13	97095–06012	BOLT BOULON	1	1				
14	92995–06600	WASHER RONDELLE	1	1				
15	67F–82341–00	CORD, HIGH TENSION 1 CORDON, HAUTE-TENSION 1	1	1				#1 #1
16	67F–82342–00	CORD, HIGH TENSION 2 CORDON, HAUTE-TENSION 2	1	1				#2 #2
17	67F–82361–00	CLAMP, CORD COLLIER, CORDON	1	1				
18	67F–82362–00	CLAMP, CORD 2 COLLIER, CABLE 2	1	1				
19	67F–82343–00	CORD, HIGH TENSION 3 CORDON, HAUTE-TENSION 3	1	1				#3 #3
20	67F–82344–00	CORD, HIGH TENSION 4 CORDON, HAUTE TENSION 4	1	1				#4 #4
21	67F–82361–00	CLAMP, CORD COLLIER, CORDON	1	1				
22	67F–82362–00	CLAMP, CORD 2 COLLIER, CABLE 2	1	1				
23	67F–81960–11	RECTIFIER & REGULATOR ASSY REDRESSEUR REGULATEUR CPLT	1	1				
24	97095–06025	BOLT BOULON	2	2				
25	92995–06100	WASHER, SPRING RONDELLE, GROWER	2	2				
26	92995–06600	WASHER RONDELLE	2	2				
27	97095–06020	BOLT BOULON	1	1				

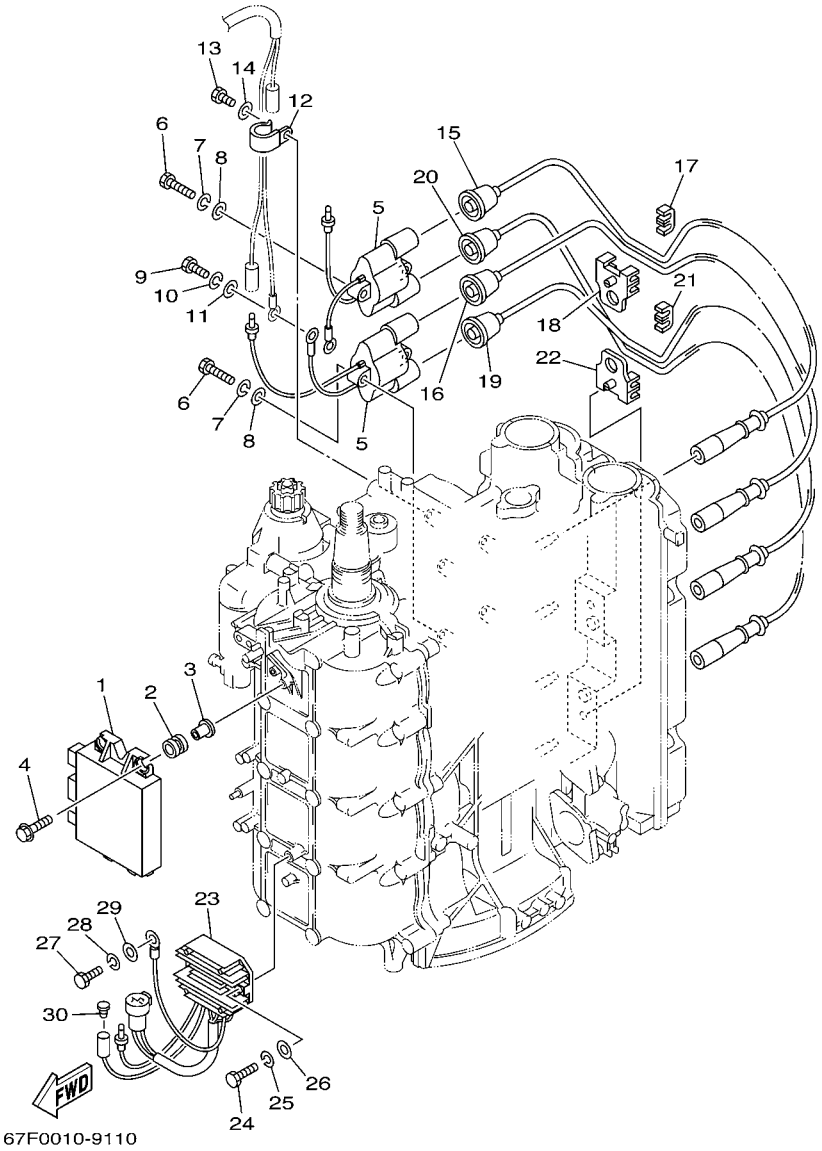

FIG. 13 ELECTRICAL 1 — PARTIE ELECTRIQUE 1

REF. NO.	PART NO. N° PIECES	DESCRIPTION DESCRIPTION	F80	F100				REMARKS REMARQUES
28	92995–06100	WASHER, SPRING RONDELLE, GROWER	1	1				
29	92995–06600	WASHER RONDELLE	1	1				
30	703–82119–00	COVER, LEAD WIRE GARNITURE, FIL	1	1				

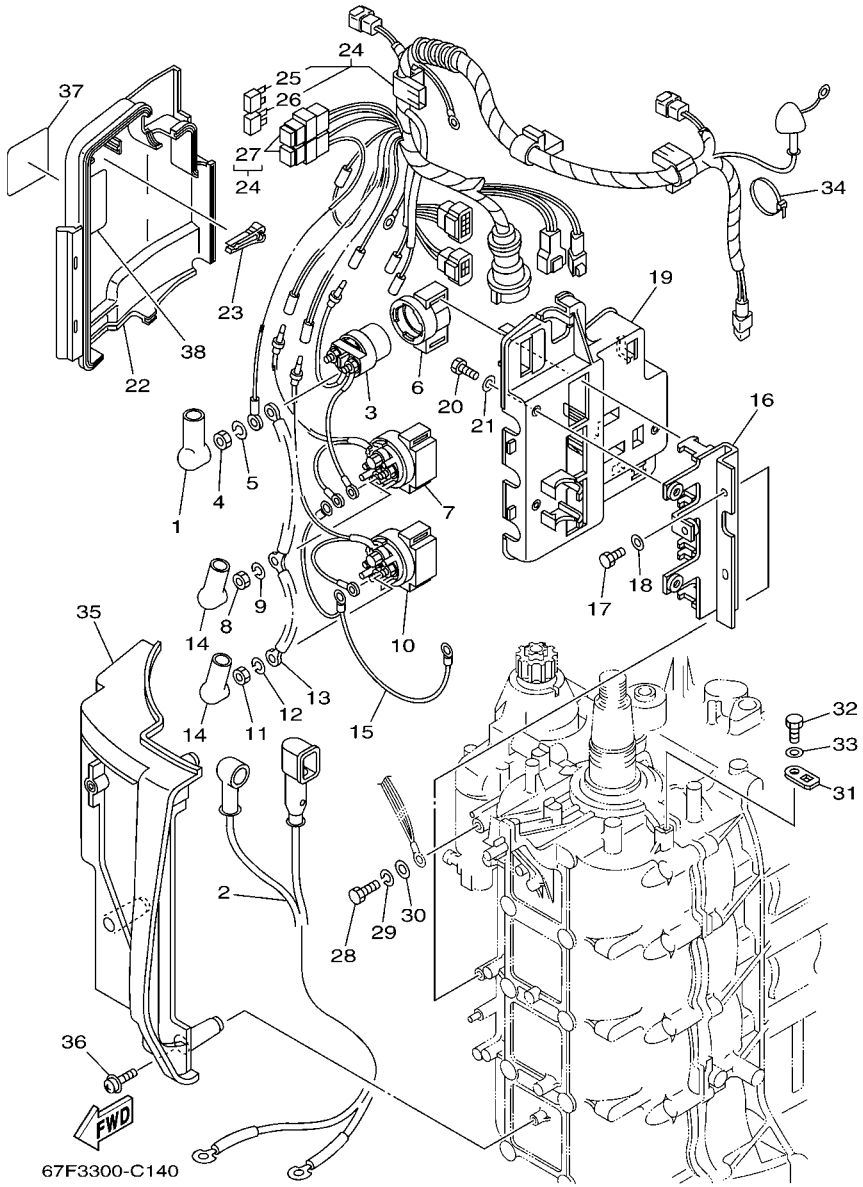

FIG. 14 ELECTRICAL 2 — PARTIE ELECTRIQUE 2

REF. NO.	PART NO. N° PIECES	DESCRIPTION DESCRIPTION	F80	F100				REMARKS REMARQUES
1	682–82119–01	COVER, LEAD WIRE GARNITURE, FIL	2	2				
2	67F–82105–00	WIRE HARNESS FAISCEAU DE FILS	1	1				
3	6G1–8194A–10	RELAY RELAIS	1	1				
4	90170–06M30	NUT ECROU	2	2				
5	90204–06M00	WASHER, SPRING RONDELLE, GROWER	2	2				
6	6G1–81952–00	HOLDER, RELAY SUPPORT, RELAIS	1	1				
7	6E5–8195B–01	RELAY ASSY RELAIS COMPLET	1	1				
8	90170–06M30	NUT ECROU	3	3				
9	90204–06M00	WASHER, SPRING RONDELLE, GROWER	3	3				
10	6E5–8195C–01	RELAY ASSY RELAIS COMPLET	1	1				
11	90170–06M30	NUT ECROU	3	3				
12	90204–06M00	WASHER, SPRING RONDELLE, GROWER	3	3				
13	66T–87149–00	CONNECTOR RACCORD	1	1				
14	6G5–82119–00	COVER, LEAD WIRE GARNITURE, FIL	2	2				
15	67F–82116–00	WIRE, MINUS LEAD FIL, NEGATIF	1	1				
16	67F–81953–00	STAY, RELAY SUPPORT, RELAIS	1	1				
17	97095–06016	BOLT BOULON	2	2				
18	92995–06600	WASHER RONDELLE	2	2				
19	67F–81948–00	BRACKET JOINT TORIQUE	1	1				
20	97095–06016	BOLT BOULON	3	3				
21	92995–06600	WASHER RONDELLE	3	3				
22	67F–81942–00	COVER COUVERCLE	1	1				
23	67F–2812A–00	PULLER, FUSE TENDEUR, FUSIBLE	1	1				
24	67F–82590–03	WIRE HARNESS ASSY FAISCEAU DE FILS COMPLET	1	1				
25	67F–82151–00	.FUSE (20A) .FUSIBLE (20A)	2	2				
26	67F–82151–10	.FUSE (30A) .FUSIBLE (30A)	2	2				
27	67F–8215B–00	.CAP (BLACK) .BOUCHON (NOIR)	2	2				

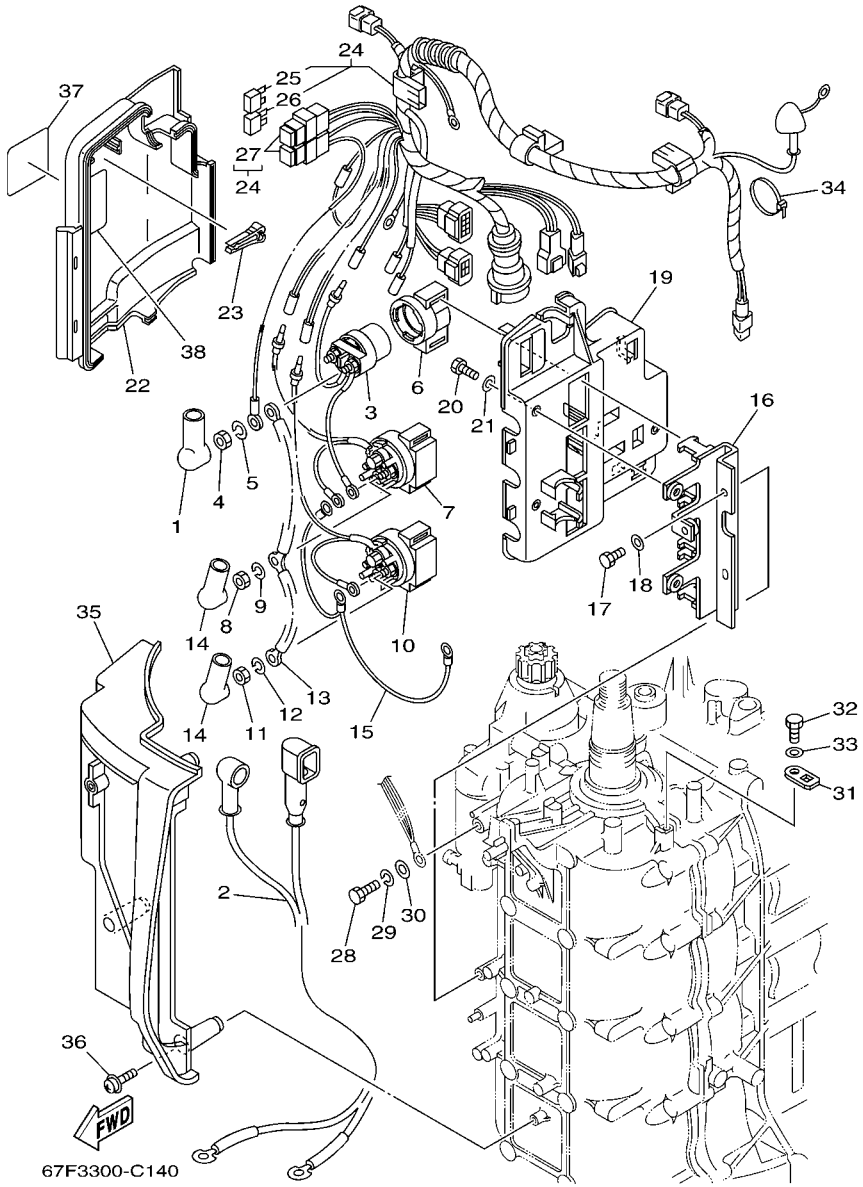

FIG. 14 ELECTRICAL 2 — PARTIE ELECTRIQUE 2

REF. NO.	PART NO. N° PIECES	DESCRIPTION DESCRIPTION	F80	F100				REMARKS REMARQUES
28	97095–06020	BOLT BOULON	1	1				
29	92995–06100	WASHER, SPRING RONDELLE, GROWER	1	1				
30	92995–06600	WASHER RONDELLE	1	1				
31	67F–82588–00	PLATE PLAQUE	3	3				
32	97095–06012	BOLT BOULON	3	3				
33	92995–06600	WASHER RONDELLE	3	3				
34	90465–13M11	CLAMP BRIDE	1	1				
35	67F–81916–01	COVER, TERMINAL COUVERCLE, BORNE	1	1				
36	90159–06M29	SCREW, WITH WASHER VIS, AVEC RONDELLE	3	3				
37	67F–83626–00	MARK 6 MARK 6	1	1				
38	67F–81919–00	GRAPHIC, REGULATOR ADHESIF, REGULATEUR	1	1				

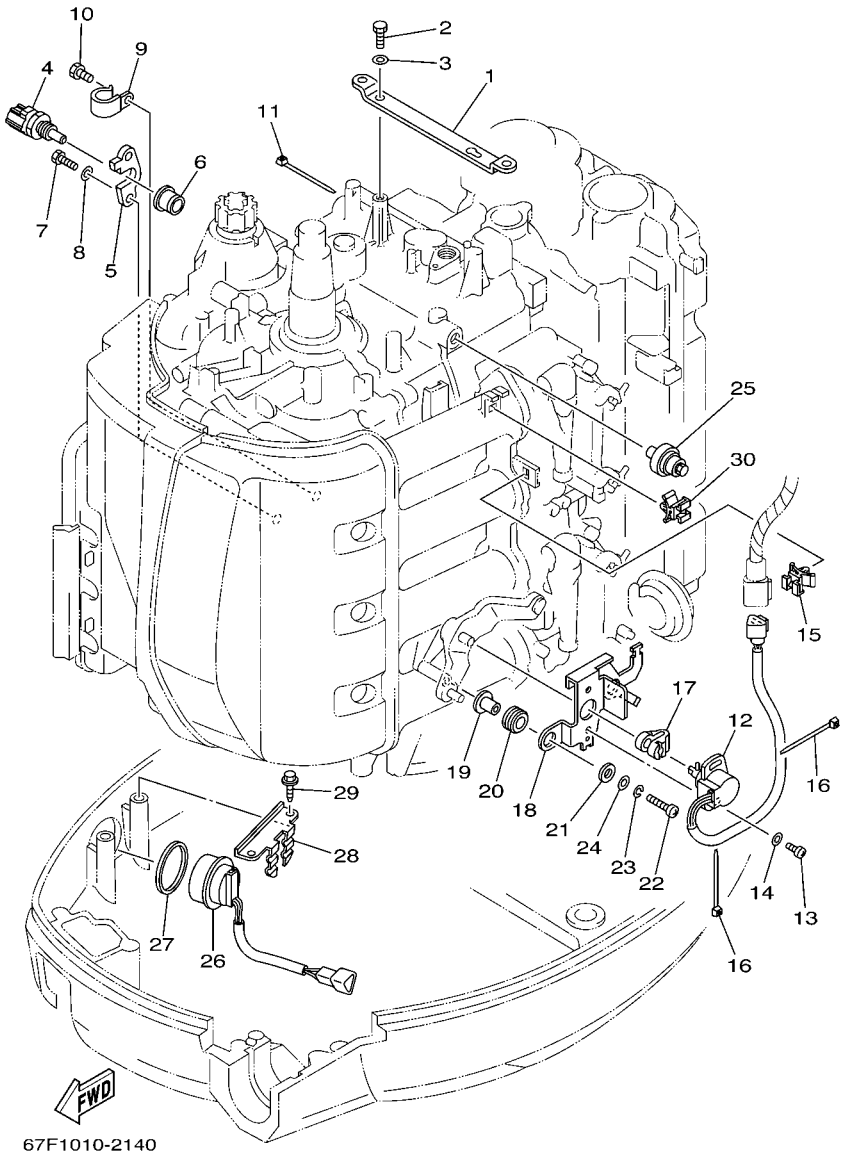

FIG. 15 ELECTRICAL 3 — PARTIE ELECTRIQUE 3

REF. NO.	PART NO. N° PIECES	DESCRIPTION DESCRIPTION	F80	F100				REMARKS REMARQUES
1	67F–8132G–01	PLATE PLAQUE	1	1				
2	97095–06016	BOLT BOULON	2	2				
3	92995–06600	WASHER RONDELLE	2	2				
4	67F–85790–00	THERMOSENSOR ASSY SENSITOMETRE	1	1				
5	67F–85757–00	RETAINER ARRETOIR	1	1				
6	68V–85753–00	GASKET, SENDER UNIT JOINT, DE PERCEPTION	1	1				
7	97095–06016	BOLT BOULON	2	2				
8	92995–06600	WASHER RONDELLE	2	2				
9	90465–06M86	CLAMP BRIDE	1	1				
10	97095–06010	BOLT BOULON	1	1				
11	90465–11M10	CLAMP BRIDE	1	1				
12	61A–85885–00	THROTTLE SENSOR ASSY SENSITOMETRE (ENS.)	1	1				
13	97885–05010	SCREW, PAN HEAD VIS, A ENCOCHE	2	2				
14	92995–05600	WASHER RONDELLE	2	2				
15	90464–09M47	CLAMP BRIDE	1	1				
16	90465–11M10	CLAMP BRIDE	2	2				
17	6K7–14573–00	LEVER LEVIER	1	1				
18	67F–83635–00	BRACKET SUPPORT	1	1				
19	90387–05M00	COLLAR COLLERETTE	2	2				
20	90480–10M23	GROMMET PASSE-FIL	2	2				
21	90201–05M03	WASHER, PLATE RONDELLE, PLATE	2	2				
22	97885–05025	SCREW, PAN HEAD VIS, A ENCOCHE	2	2				
23	92995–05100	WASHER RONDELLE	2	2				
24	92995–05600	WASHER RONDELLE	2	2				
25	68V–82504–00	OIL PRESSURE SWITCH ASSY CONTACTEUR DE PRESSION D'HUILE	1	1				
26	63D–82563–10	TRIM & TILT SWITCH ASSY INCLINER ET PARER COMMUTATEUR	1	1				
27	6E5–82587–00	GASKET JOINT	1	1				

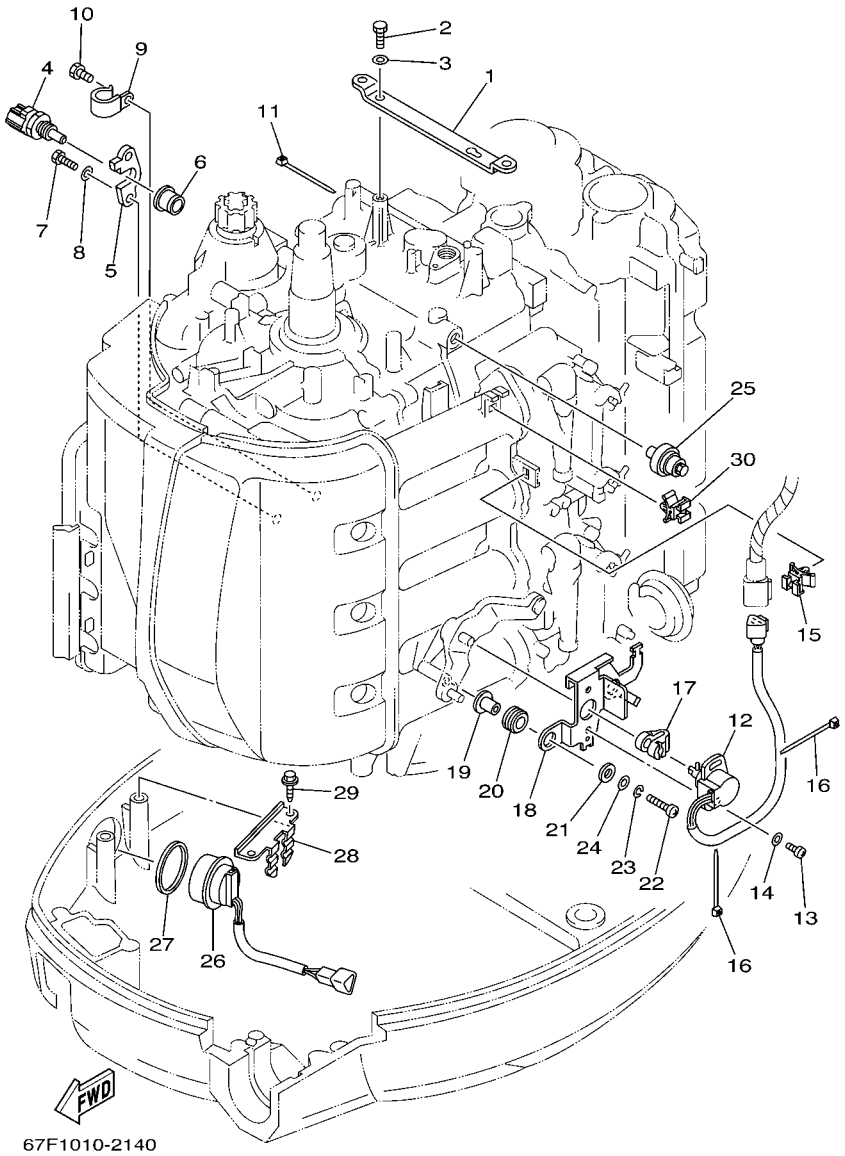

FIG. 15 ELECTRICAL 3 — PARTIE ELECTRIQUE 3

REF. NO.	PART NO. N° PIECES	DESCRIPTION DESCRIPTION	F80	F100				REMARKS REMARQUES
28	67F–83614–00	BRACKET SUPPORT	1	1				
29	90109–06M86	BOLT BOULON	2	2				
30	90464–09M47	CLAMP BRIDE	1	1				

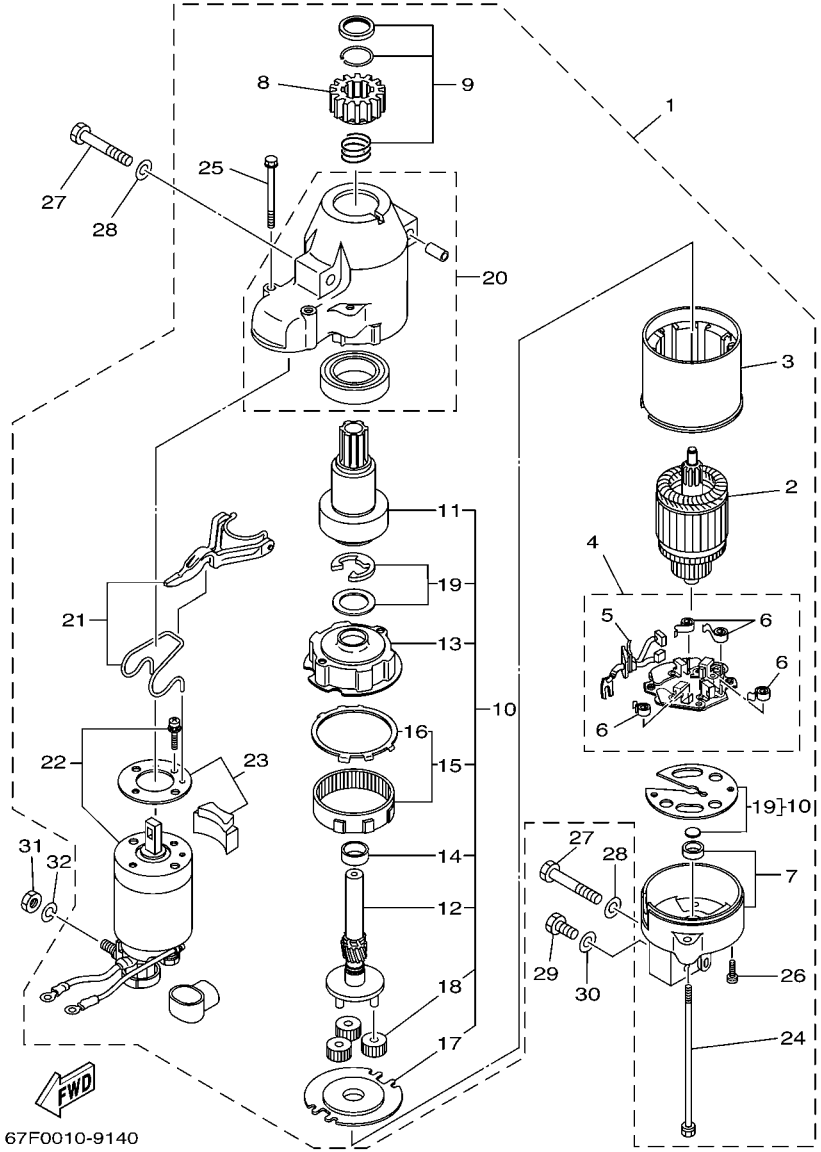

FIG. 16 STARTING MOTOR DEMARREUR ELECTRIQUE

REF. NO.	PART NO. N° PIECES	DESCRIPTION DESCRIPTION	F80	F100				REMARKS REMARQUES
1	67F–81800–02	STARTING MOTOR ASSY DEMARREUR ELECTRIQUE COMPLET	1	1				
2	67F–81850–00	.ARMATURE ASSY .INDUIT	1	1				
3	67F–81810–00	.STATOR ASSY .STATOR COMPLET	1	1				
4	67F–81840–00	.BRUSH HOLDER ASSY .SUPPORT DE CHARBON	1	1				
5	67F–81801–00	..BRUSH SET ..CHARBON	1	1				
6	67F–81813–00	..SPRING, BRUSH ..RESSORT, DE CHARBON	4	4				
7	67F–81820–00	.REAR BRACKET ASSY .SUPPORT ARRIERE COMPLET	1	1				
8	67F–81808–00	.PINION ASSY .PIGNON	1	1				
9	67F–81857–00	.PINION STOPPER SET .BUTEE PIGNON	1	1				
10	67F–81807–00	.GEAR ASSY, STARTING MOTOR .PIGNON, DEMARREUR ELECTRIQUE	1	1				
11	67F–81832–00	..CLUTCH, OVER RUN ..EMBRAYAGE, ROUE LIBRE	1	1				
12	67F–81836–00	..SHAFT, PINION ..AXE, PIGNON	1	1				
13	67F–81821–00	..BRACKET, CENTER 1 ..SUPPORT, CENTRE 1	1	1				
14	67F–81841–00	..BEARING ..ROULEMENT	1	1				
15	67F–81891–00	..GEAR, RING ..ROUE DENTEE	1	1				
16	67F–8183R–00	...GASKET ...JOINT	1	1				
17	67F–81830–00	..BRACKET, CENTER 2 ..SUPPORT, CENTRE 2	1	1				
18	67F–8183T–00	..GEAR, IDLER ..PIGNON, INTERMEDIAIRE	3	3				
19	67F–81809–00	..WASHER KIT ..JEU DE RONDELLES	1	1				
20	67F–81842–00	.COVER .COUVERCLE	1	1				
21	67F–81839–00	.LEVER ASSY .LEVIER COMPLET	1	1				
22	67F–81941–01	.STARTER RELAY ASSY .LANCEUR RELAIS (ENS.)	1	1				
23	67F–81869–00	.COVER, DUST .COUVERCLE, POUSSIERE	1	1				
24	6K7–81826–10	.BOLT .BOULON	2	2				
25	67F–81828–00	.BOLT 2 .RONDELLE, BUTEE 2	2	2				
26	67F–81846–00	.SCREW .VIS	2	2				
27	97013–08045	BOLT BOULON	3	3				

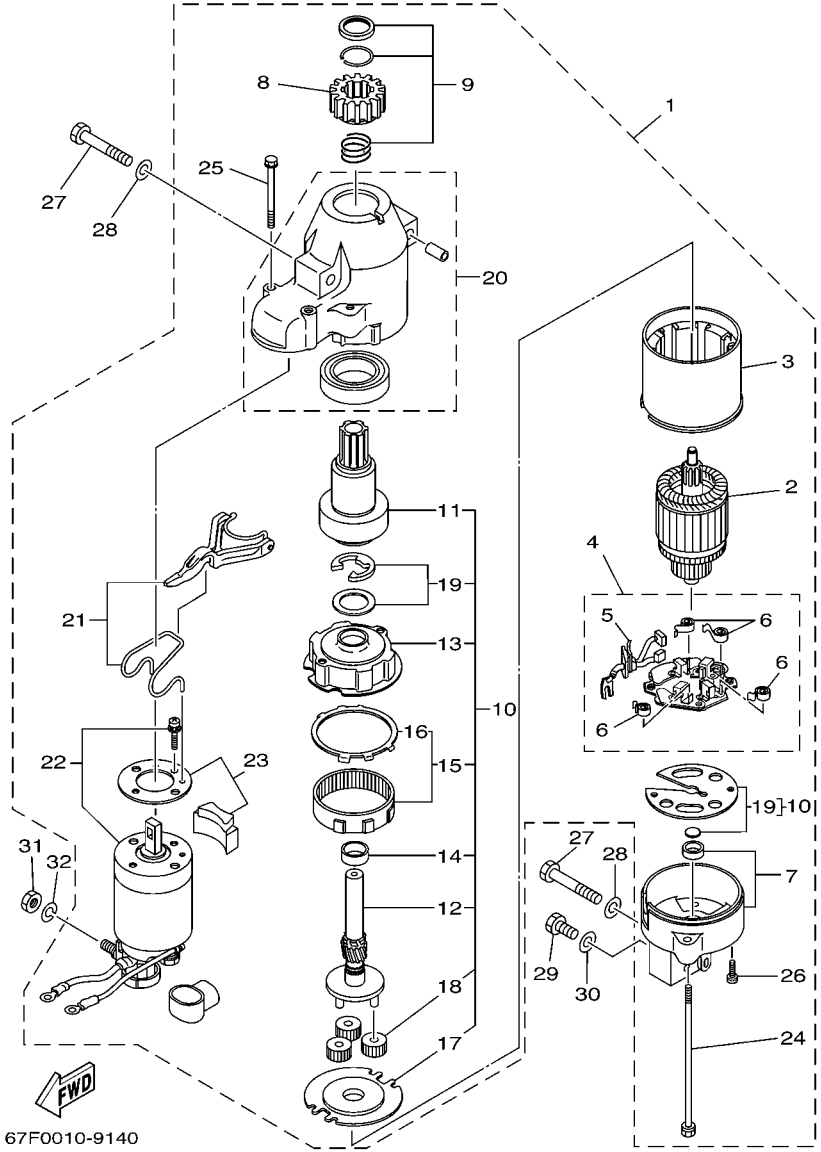

FIG. 16 STARTING MOTOR DEMARREUR ELECTRIQUE

REF. NO.	PART NO. N° PIECES	DESCRIPTION DESCRIPTION	F80	F100				REMARKS REMARQUES
28	92903–08600	WASHER, PLATE RONDELLE, PLATE	3	3				
29	97013–08016	BOLT BOULON	1	1				
30	92903–08600	WASHER, PLATE RONDELLE, PLATE	1	1				
31	95333–08600	NUT ECROU	1	1				
32	92903–08100	WASHER, SPRING RONDELLE, GROWER	1	1				

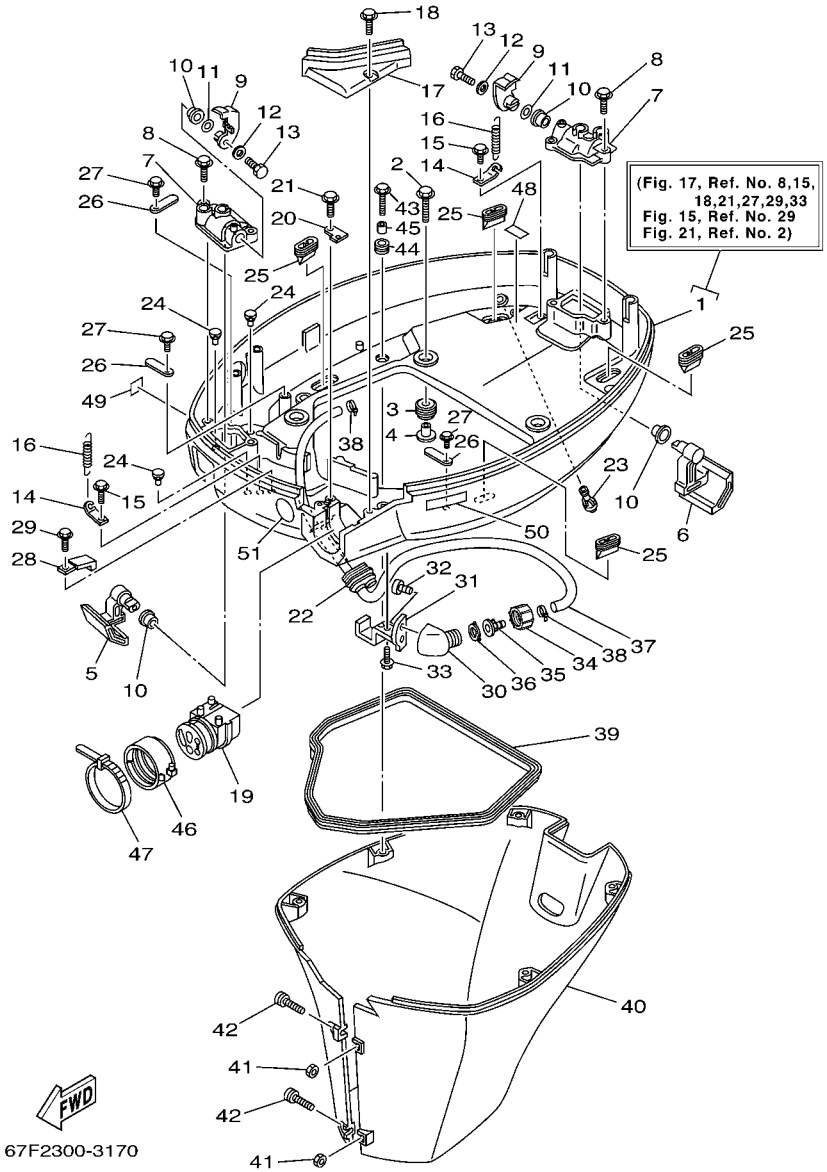

FIG. 17 BOTTOM COWLING CAPOT INFERIEUR

REF. NO.	PART NO. N° PIECES	DESCRIPTION DESCRIPTION	F80	F100				REMARKS REMARQUES
1	67F–42710–01–4D	BOTTOM COWLING ASSY ENS. EMBASE	1	1				
2	90119–08M22	BOLT, WITH WASHER BOULON, AVEC RONDELLE	4	4				
3	90480–22M15	GROMMET PASSE-FIL	4	4				
4	90387–08M37	COLLAR COLLERETTE	4	4				
5	67F–42815–00–4D	LEVER, CLAMP LEVIER, PRESSE	1	1				
6	67F–42816–00–4D	LEVER, CLAMP LEVIER, PRESSE	1	1				
7	67F–42828–00–5B	PLATE, CLAMP PLAQUE, PRESSE	2	2				
8	90109–06M82	BOLT BOULON	4	4				
9	67F–42818–00	LEVER, CLAMP LEVIER, PRESSE	2	2				
10	90386–15M73	BUSH DOUILLE	4	4				
11	90206–15M18	WASHER, WAVE RONDELLE, ONDULEE	2	2				
12	90201–06068	WASHER, PLATE RONDELLE, PLATE	2	2				
13	97095–06016	BOLT BOULON	2	2				
14	64D–43144–00	HOOK, SPRING CROCHET	2	2				
15	90109–06M86	BOLT BOULON	2	2				
16	90506–16M34	SPRING, TENSION RESSORT, TENSION	2	2				
17	67F–42738–00–5B	PLATE, FITTING ETRIER	1	1				
18	90109–06M96	BOLT BOULON	2	2				
19	68V–42725–00	GROMMET PASSE-FIL	1	1				
20	67F–42756–00	STAY, CLAMP SUPPORT, COLLIER	1	1				
21	90109–06M86	BOLT BOULON	1	1				
22	6H1–42726–21	GROMMET PASSE-FIL	1	1				FLUSHING KIT FLUSHING KIT
23	6H3–44391–01	NIPPLE, HOSE RACCORD D'ESSENCE	1	1				
24	6H4–42748–00	GROMMET PASSE-FIL	3	3				
25	67F–42717–00	RUBBER, SEAL 2 JOINT EN CAOUTCHOUC 2	4	4				
26	6E5–82588–00	PLATE PLAQUE	3	3				
27	90109–06M81	BOLT BOULON	3	3				

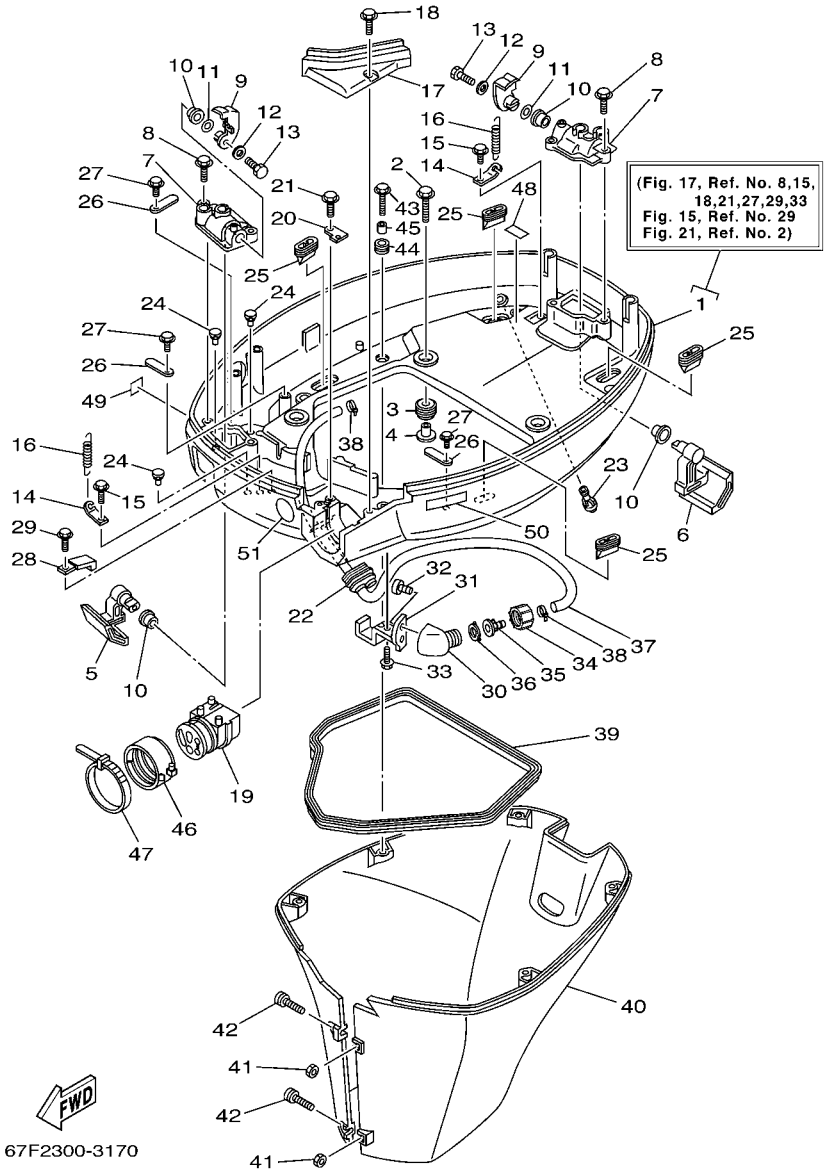

FIG. 17 BOTTOM COWLING CAPOT INFERIEUR

REF. NO.	PART NO. N° PIECES	DESCRIPTION DESCRIPTION	F80	F100				REMARKS REMARQUES
28	90465–08M23	CLAMP BRIDE	1	1				
29	90109–06M86	BOLT BOULON	1	1				
30	68T–12572–00	ADAPTER ADAPTATEUR	1	1				FLUSHING KIT FLUSHING KIT
31	67F–12535–00	PLATE PLAQUE	1	1				FLUSHING KIT FLUSHING KIT
32	90167–06002	SCREW, TAPPING VIS, TETE FRAISEE	2	2				FLUSHING KIT FLUSHING KIT
33	90109–06M86	BOLT BOULON	1	1				FLUSHING KIT FLUSHING KIT
34	6R3–12581–00	JOINT, HOSE 1 JOINT DE TUYAU	1	1				FLUSHING KIT FLUSHING KIT
35	6R3–12582–00	JOINT, HOSE 2 RACCORD DE TUYAU 1	1	1				FLUSHING KIT FLUSHING KIT
36	6R3–12583–00	GASKET, HOSE JOINT JOINT	1	1				FLUSHING KIT FLUSHING KIT
37	67F–24312–00	PIPE 2 DURITE 2	1	1				FLUSHING KIT FLUSHING KIT
38	90465–11M10	CLAMP BRIDE	2	2				FLUSHING KIT FLUSHING KIT
39	61A–42716–00	RUBBER, SEAL 1 JOINT EN CAOUTCHOUC 1	1	1				
40	67F–42741–00–4D	APRON CAPOT LATERAL	1	1				
41	95380–06600	NUT, HEXAGON ECROU	2	2				
42	90159–06M28	SCREW, WITH WASHER VIS, AVEC RONDELLE	2	2				
43	90109–06M80	BOLT BOULON	5	5				
44	90480–13M24	GROMMET PASSE-FIL	5	5				
45	90387–06M43	COLLAR COLLERETTE	5	5				
46	68F–42753–00	FASTNER ATTACHE	1	1				AP AP
47	90464–20258	CLAMP BRIDE	1	1				AP AP
48	67F–82377–00	LABEL ETIQUETTE	1	1				
49	6A1–28176–00	LABEL, CAUTION ETIQUETTE, RECOMMANDATION	1	1				
50	6E3–8257H–00	PLATE, MARK PLAQUE, ADHESIF	1	1				
51	6G8–2415E–00	LABEL, CAUTION ETIQUETTE, RECOMMANDATION	1					FOR SAV FOR SAV

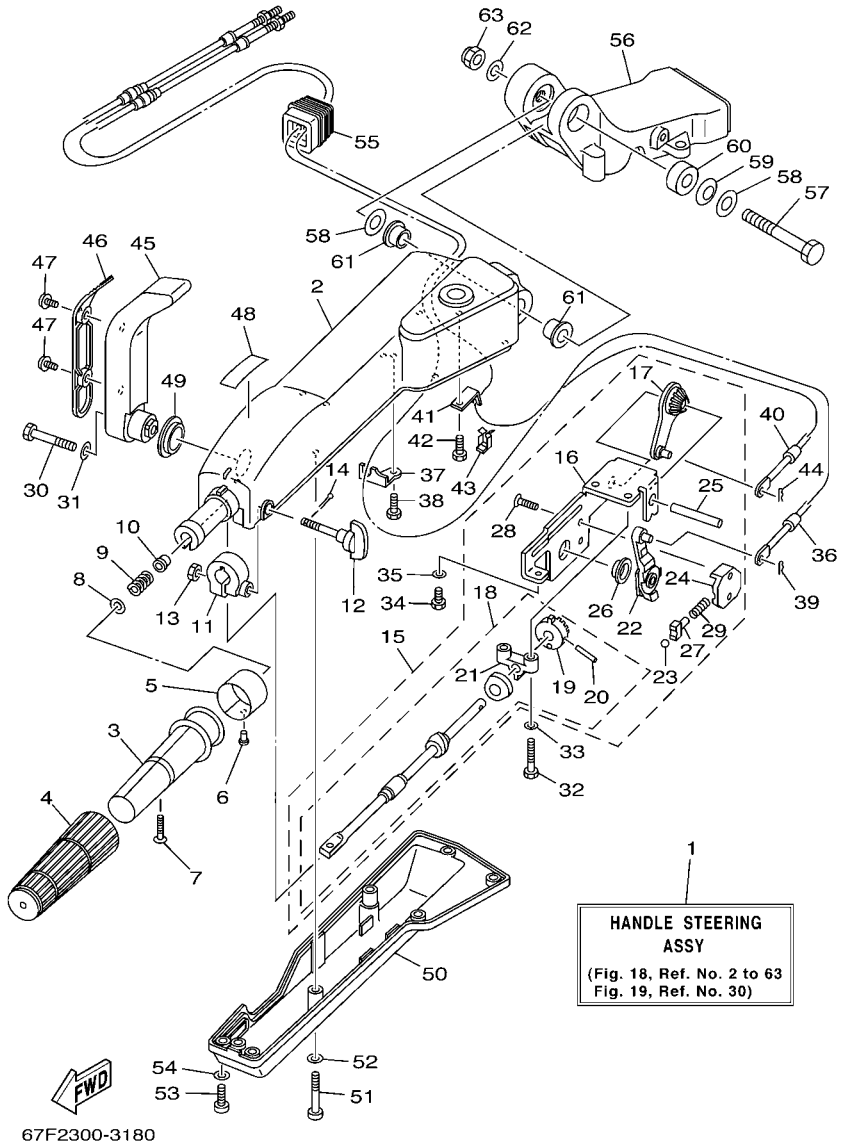

FIG. 18 STEERING 1 — DIRECTION 1

REF. NO.	PART NO. N° PIECES	DESCRIPTION DESCRIPTION	F80	F100				REMARKS REMARQUES
1	67G–W0084–12–4D	HANDLE STEERING ASSY BARRE FRANCHE (ENS.)	1	1				AP AP
2	67G–42111–00–4D	HANDLE, STEERING POIGNEE	1	1				
3	664–42119–00	GRIP, STEERING HANDLE POIGNEE, BARRE FRANCHE	1	1				
4	6G1–42177–00	RUBBER, HANDLE CAOUTCHOUC, POIGNEE	1	1				
5	6H2–42137–00	INDICATOR, THROTTLE INDICATEUR, ACCELERATION	1	1				
6	90269–02M09	RIVET RIVET	1	1				
7	90149–05M13	SCREW VIS	1	1				
8	92903–10600	WASHER, PLATE RONDELLE, PLATE	1	1				
9	90501–23215	SPRING, COMPRESSION RESSORT, COMPRESSION	1	1				
10	90386–08032	BUSH DOUILLE	1	1				
11	63D–42126–00	FRICTION, STEERING HANDLE GRIP CUVETTE, POIGNEE DE DIRECTION	1	1				
12	63D–48154–00	KNOB, THROTTLE BOUTON, ACCELERATEUR	1	1				
13	95380–06600	NUT, HEXAGON ECROU	1	1				
14	91490–20010	PIN, COTTER GOUPILLE	1	1				
15	67G–44100–10	SHIFT LINK ASSY MAILLON DE SELECTEUR	1	1				
16	67G–44104–00	.PLATE COMP. .PLAQUE COMPLET	1	1				
17	67G–48261–00	.ARM, THROTTLE .BRAS, ACCELERATION	1	1				
18	67G–42115–10	.SHAFT, STEERING HANDLE .AXE, BARRE FRANCHE	1	1				
19	650–42152–00–94	..GEAR ..PIGNON	1	1				
20	91690–30025	..PIN, SPRING ..AGRAFFE	1	1				
21	67G–42159–00	..STAY ..SUPPORT	1	1				
22	67G–44113–00	.CAM PLATE, HANDLE .CAME, VERROUILLAGE	1	1				
23	63D–48236–00	.ROLLER, DETENT .POULIE	1	1				
24	63D–48119–00	.COVER .COQUILLE	1	1				
25	67G–42153–00	.SHAFT, THROTTLE CONTROL .AXE, COMMANDE D'ACCELERATION	1	1				
26	67G–44132–00	.BUSHING .COUSSINET	1	1				
27	63D–48237–00	.ADAPTOR .ADAPTEUR	1	1				

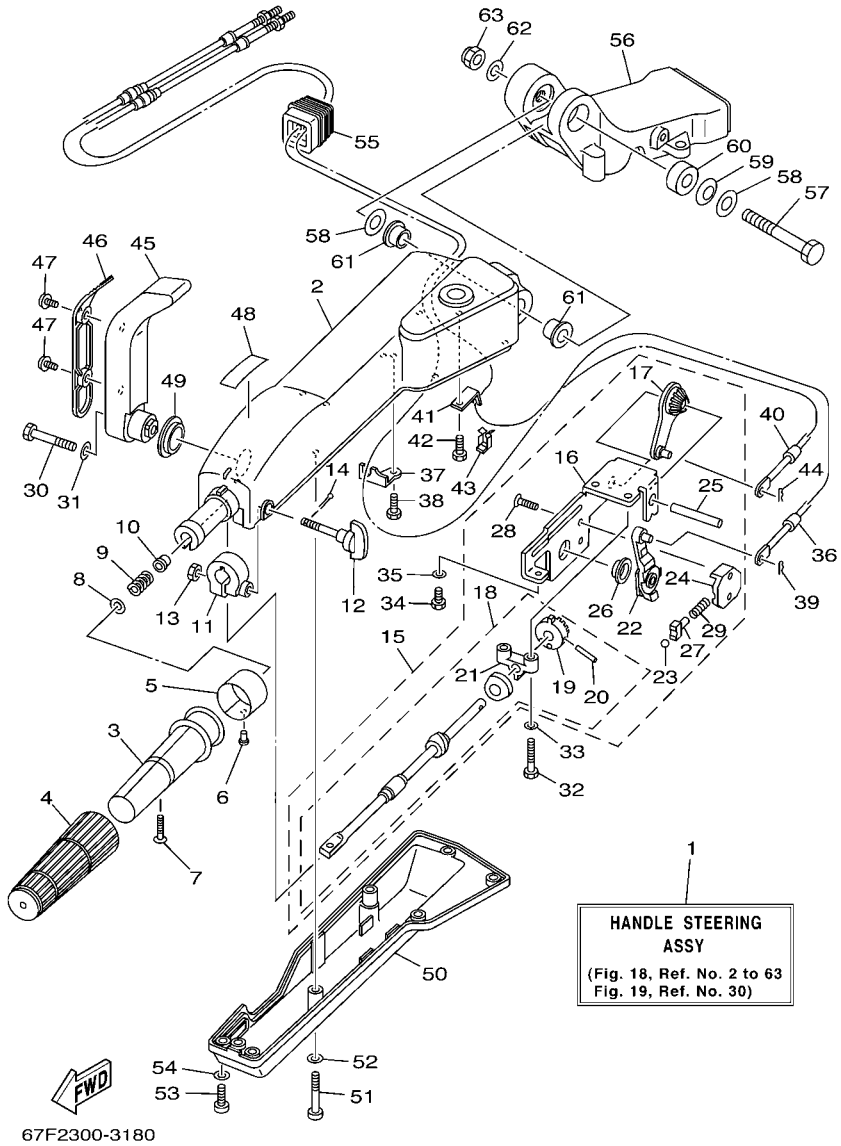

FIG. 18 STEERING 1 — DIRECTION 1

REF. NO.	PART NO. N° PIECES	DESCRIPTION DESCRIPTION	F80	F100				REMARKS REMARQUES
28	98785–05014	.SCREW, FLAT HEAD .VIS, TETE PLATE	2	2				
29	63D–48238–00	.SPRING, DETENT .RESSORT	1	1				
30	97095–08040	BOLT BOULON	1	1				
31	92995–08600	WASHER RONDELLE	1	1				
32	97095–06030	BOLT BOULON	2	2				
33	92995–06600	WASHER RONDELLE	2	2				
34	97095–06014	BOLT BOULON	1	1				
35	92995–06600	WASHER RONDELLE	1	1				
36	67G–48321–10	CABLE CABLE	1	1				
37	67G–48531–00	BRACKET, REMOTE CONTROL 1 ETRIER 1, COMMANDE A DISTANCE	1	1				
38	97095–06014	BOLT BOULON	1	1				
39	90468–10005	CLIP JONC	1	1				
40	67G–26301–10	THROTTLE CABLE ASSY CABLE D'ACCELERATEUR	1	1				
41	66R–48538–00	CLAMP, CABLE 1 COLLIER	1	1				
42	97095–06014	BOLT BOULON	1	1				
43	63D–48538–00	CLAMP, CABLE 1 COLLIER	1	1				
44	90468–10005	CLIP JONC	1	1				
45	67G–44159–00–4D	HANDLE, GEAR SHIFT POIGNEE, LEVIER D'EMBRAYAGE	1	1				
46	67G–44173–00	LEVER, SHIFT CONTROL POIGNEE, INVERSION	1	1				
47	90159–06M18	SCREW, WITH WASHER VIS, AVEC RONDELLE	2	2				
48	6G8–44191–00	INDICATOR, SHIFT ETIQUETTE, EMBRAYAGE	1	1				
49	90386–26MA3	BUSH DOUILLE	1	1				
50	67G–42131–00	COVER, HANDLE STEERING COUVERCLE	1	1				
51	97885–06040	SCREW, PAN HEAD VIS, A ENCOCHE	2	2				
52	92995–06600	WASHER RONDELLE	2	2				
53	97885–06016	SCREW, PAN HEAD VIS, A ENCOCHE	5	5				
54	92995–06600	WASHER RONDELLE	5	5				

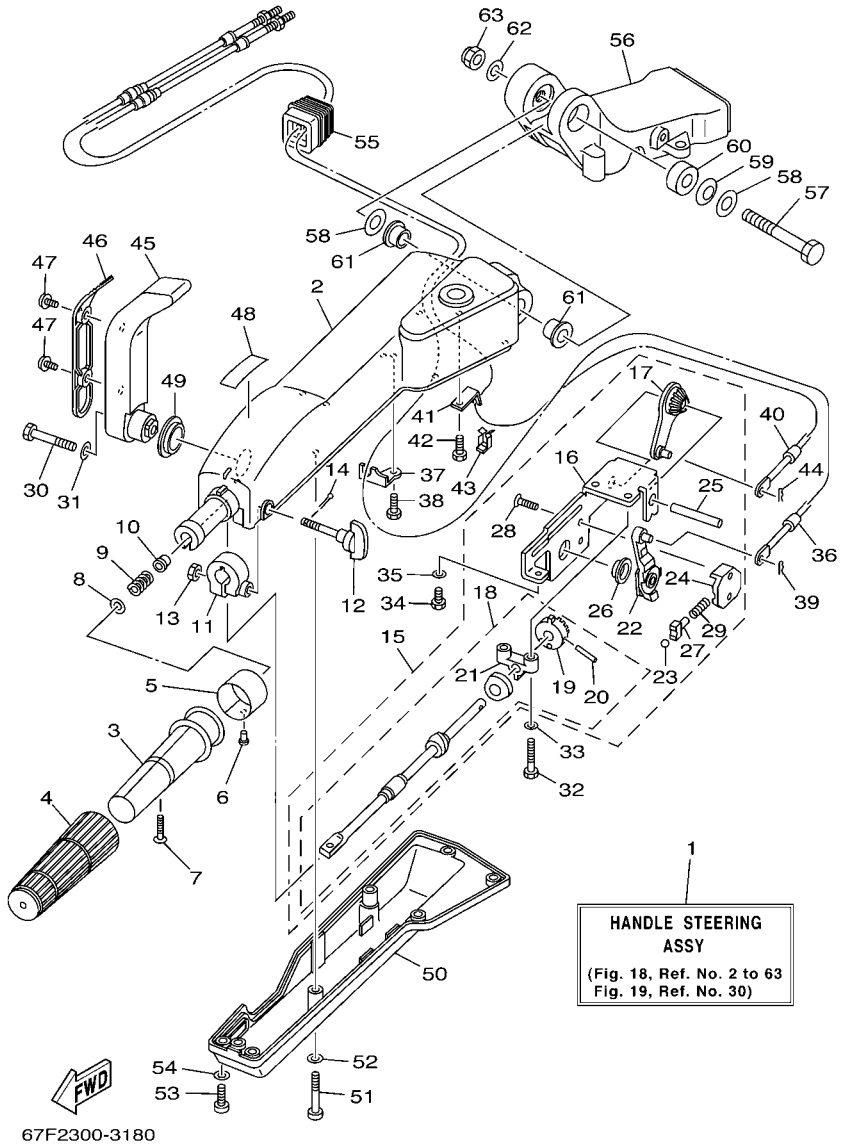

FIG. 18 STEERING 1 — DIRECTION 1

REF. NO.	PART NO. N° PIECES	DESCRIPTION DESCRIPTION	F80	F100				REMARKS REMARQUES
55	63D–42725–00	GROMMET PASSE-FIL	1	1				
56	63D–42121–30–4D	BRACKET SUPPORT	1	1				
57	90101–12M09	BOLT BOULON	1	1				
58	92990–12200	WASHER, PLAIN RONDELLE, PLATE	2	2				
59	90206–12M22	WASHER, WAVE RONDELLE, ONDULEE	1	1				
60	90387–12M02	COLLAR COLLERETTE	1	1				
61	90386–12M93	BUSH DOUILLE	2	2				
62	92990–12600	WASHER, PLATE RONDELLE, PLATE	1	1				
63	90185–12M12	NUT, SELF-LOCKING ECROU, AUTO-BLOCANT	1	1				

FIG. 19 STEERING 2 — DIRECTION 2

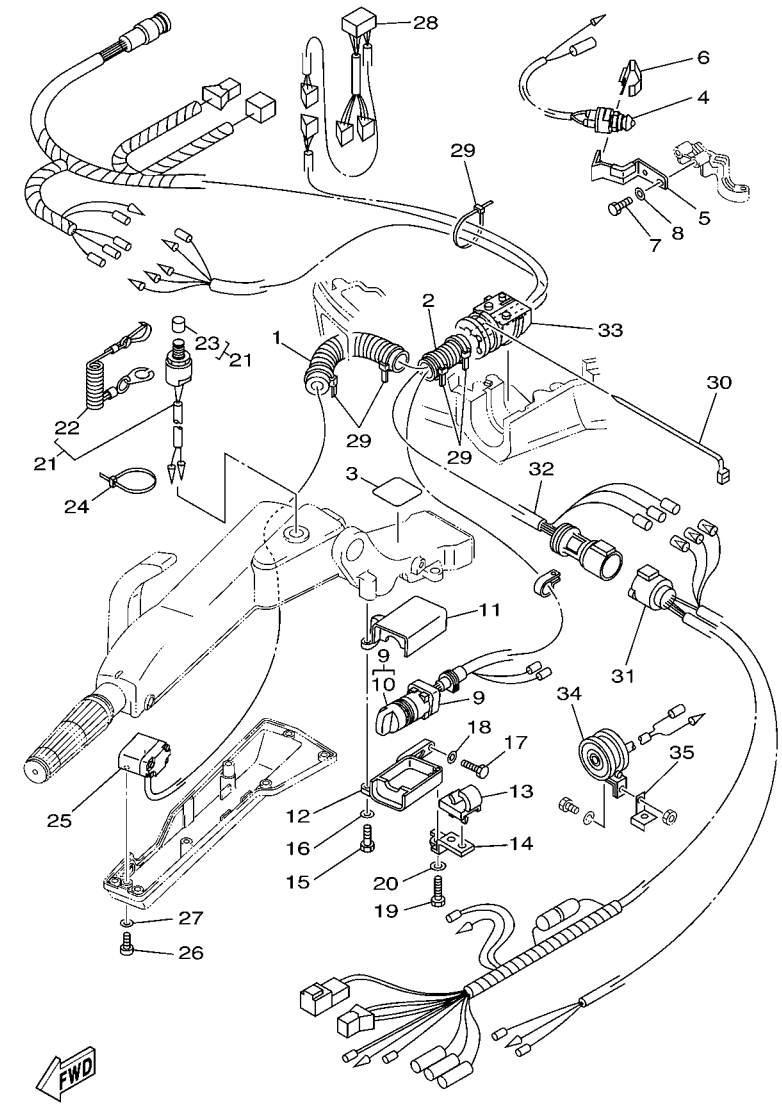

68V3100-C190

REF. NO.	PART NO. N° PIECES	DESCRIPTION DESCRIPTION	F80	F100				REMARKS REMARQUES
1	90446–24M79	HOSE DURITE	1	1				AP AP
2	6K3–83557–00	TUBE TUBE	1	1				AP AP
3	67G–42735–00	PROTECTOR PROTECTEUR	1	1				AP AP
4	688–82540–11	NEUTRAL SWITCH ASSY CONTACTEUR DE POINT-MORT	1	1				AP AP
5	67G–82554–01	STAY, NEUTRAL SWITCH SUPPORT, CONT DE POINT-MORT	1	1				AP AP
6	62Y–82555–00	DAMPER, MAIN SWITCH 1 AMORTISSEUR 1, CONTACT A CLEF	1	1				AP AP
7	97095–06014	BOLT BOULON	2	2				AP AP
8	92995–06600	WASHER RONDELLE	2	2				AP AP
9	67G–82510–50	MAIN SWITCH ASSY CONTACTEUR A CLEF COMPLET	1	1				AP AP
10	676–82577–00	.CAP, KEY .CABOCHON	1	1				
11	63D–8252E–01–4D	COVER, MAIN SWITCH COUVERCLE	1	1				AP AP
12	63D–8252F–01–4D	COVER, MAIN SWITCH 2 COUVERCLE 2	1	1				AP AP
13	63D–24367–00	CLAMP, FUEL PIPE 2 COLLIER DE DURITE A ESSENCE	1	1				AP AP
14	63D–24364–00	STAY SUPPORT	1	1				AP AP
15	97095–06025	BOLT BOULON	1	1				AP AP
16	92995–06600	WASHER RONDELLE	1	1				AP AP
17	97095–06020	BOLT BOULON	1	1				AP AP
18	92995–06600	WASHER RONDELLE	1	1				AP AP
19	97095–06030	BOLT BOULON	1	1				AP AP
20	92995–06600	WASHER RONDELLE	1	1				AP AP
21	69W–82575–00	ENGINE STOP SWITCH ASSY COUPE CIRCUIT CPLT	1	1				AP AP
22	682–82556–00	.STOPPER .PLAQUETTE	1	1				
23	689–8257Y–00	.CAP .CHAPEAU	1	1				
24	90465–13M11	CLAMP BRIDE	1	1				AP AP
25	67G–82563–00	TRIM & TILT SWITCH ASSY INCLINER ET PARER COMMUTATEUR	1	1				AP AP
26	97885–06016	SCREW, PAN HEAD VIS, A ENCOCHE	2	2				AP AP
27	92995–06600	WASHER RONDELLE	2	2				AP AP

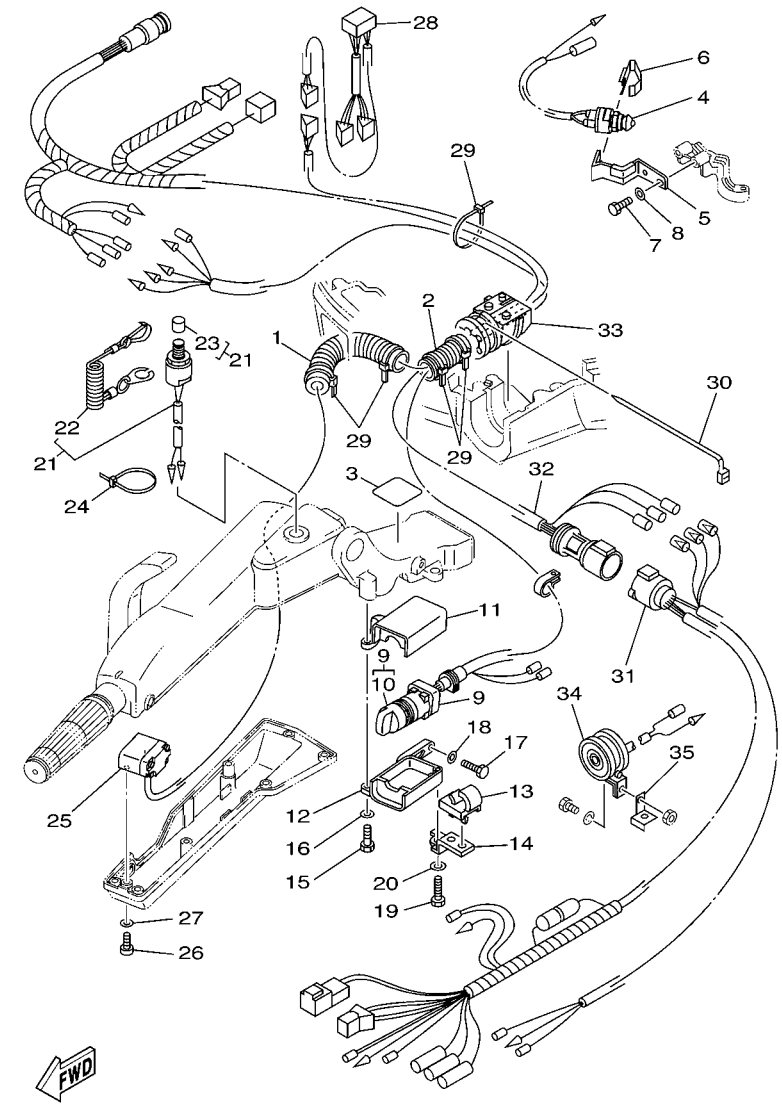

68V3100-C190

FIG. 19 STEERING 2 — DIRECTION 2

REF. NO.	PART NO. N° PIECES	DESCRIPTION DESCRIPTION	F80	F100				REMARKS REMARQUES
28	63D–83728–00	CONNECTOR ASSY CONNEXION COMPLET	1	1				AP AP
29	90465–13M24	CLAMP BRIDE	5	5				AP AP
30	90465–13M30	CLAMP BRIDE	1	1				AP AP
31	6H5–83553–12	WIRE, LEAD FIL	1	1				AP AP
32	63D–82586–01	EXTENSION, WIRE HARNESS EXTENSION, FAISCEAU DE FILS	1	1				AP AP
33	67G–42725–01	GROMMET PASSE-FIL	1	1				AP AP
34	688–83383–11	BUZZER RONFLEUR	1	1				AP AP
35	6H5–83386–00	STAY, BUZZER SUPPOR, RONFLEUR	1	1				AP AP

FIG. 20 STEERING FRICTION — CUVETTE POIGNEE DE DIRECTION

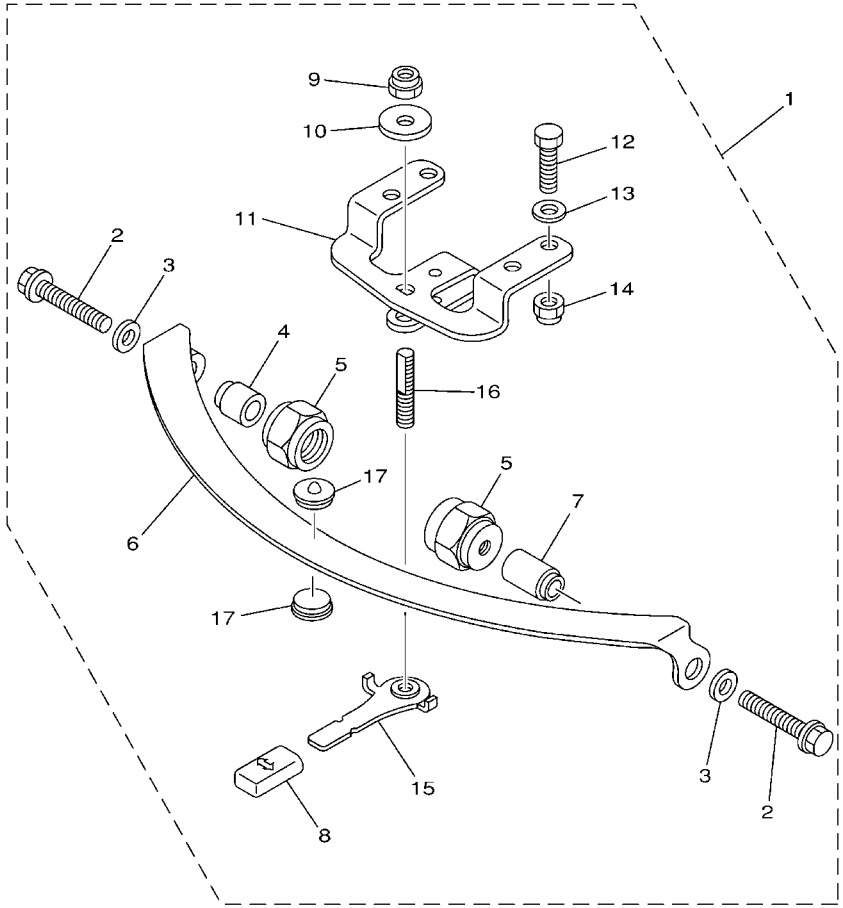

67F1100-2200

REF. NO.	PART NO. N° PIECES	DESCRIPTION DESCRIPTION	F80	F100				REMARKS REMARQUES
1	67G–42508–00	STEERING FRICTION ASSY DIRECTION FRICTION (ENS.)	1	1				AP AP
2	90119–08M74	.BOLT, WITH WASHER .BOULON, AVEC RONDELLE	2	2				
3	90201–08M01	.WASHER, PLATE .RONDELLE, PLATE	2	2				
4	67G–42541–00	.DAMPER .AMORTISSEUR	1	1				
5	67G–42546–00	.NUT .ECROU	2	2				
6	63D–42527–00	.PLATE, FRICTION .PLAQUE, FRICTION	1	1				
7	67G–42541–10	.DAMPER .AMORTISSEUR	1	1				
8	682–43318–01	.COVER .CAPUCHON	1	1				
9	90185–10M14	.NUT, SELF-LOCKING .ECROU, AUTO-BLOCANT	1	1				
10	90201–10M76	.WASHER, PLATE .RONDELLE, PLATE	1	1				
11	67G–42526–00	.PLATE, FRICTION .PLAQUE, FRICTION	1	1				
12	97095–08025	.BOLT .BOULON	2	2				
13	92995–08600	.WASHER .RONDELLE	2	2				
14	90185–08057	.NUT, SELF-LOCKING .ECROU, AUTO-BLOCANT	2	2				
15	67G–42561–00	.KNOB, STEERING LOCK .BOUTON	1	1				
16	67G–42562–00	.SHAFT, STEERING LOCK .ARBRE,ANTIVOL DE DIRECTION	1	1				
17	63D–42528–00	.PLATE, FRICTION .PLAQUE, FRICTION	2	2				

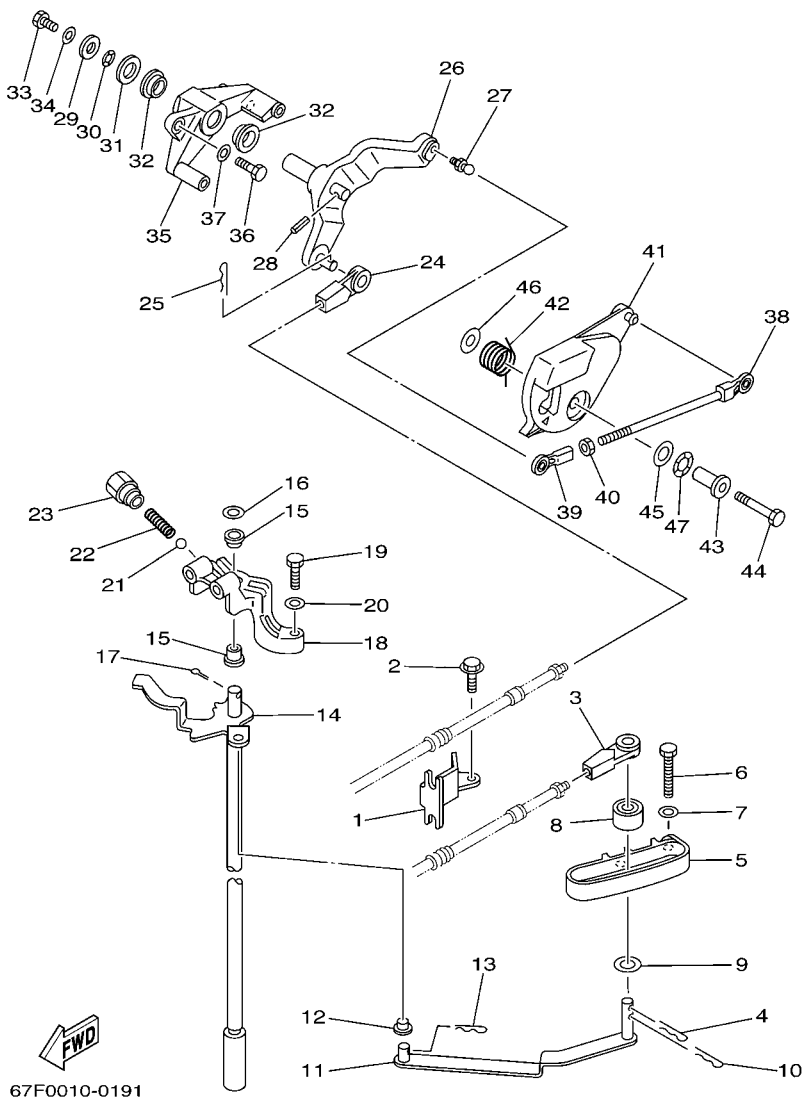

FIG. 21 CONTROL COMMANDE

REF. NO.	PART NO. N° PIECES	DESCRIPTION DESCRIPTION	F80	F100				REMARKS REMARQUES
1	67F–48538–00	CLAMP, CABLE 1 COLLIER	1	1				
2	90109–06M86	BOLT BOULON	1	1				
3	663–48344–00	CABLE END, REMOTE CONTROL CHAPE CABLE	1	1				
4	90468–18008	CLIP JONC	1	1				
5	67F–44117–00	BRACKET SUPPORT	1	1				
6	97095–06040	BOLT BOULON	2	2				
7	92995–06600	WASHER RONDELLE	2	2				
8	688–44122–00	BUSHING, SHIFT ROD LEVER DOUILLE, LEVIER D'EMBRAYAGE	1	1				
9	90202–07M07	WASHER, PLATE RONDELLE, PLATE	1	1				
10	90468–18008	CLIP JONC	1	1				
11	67F–44121–00	LEVER, SHIFT ROD LEVIER, TIGE D'INVERSION	1	1				
12	90386–06M12	BUSH DOUILLE	1	1				
13	90468–18008	CLIP JONC	1	1				
14	67F–44120–10	HANDLE GEAR SHIFT ASSY LEVIER D'EMBRAYAGE	1	1				L L
15	90386–90M90	BUSH DOUILLE	2	2				
16	90201–09M02	WASHER, PLATE RONDELLE, PLATE	1	1				
17	91490–20015	PIN, COTTER GOUPILLE	1	1				
18	67F–44118–00	BRACKET SUPPORT	1	1				
19	97075–06025	BOLT BOULON	2	2				
20	92995–06600	WASHER RONDELLE	2	2				
21	93501–04M02	BALL BILLE	1	1				
22	90501–12082	SPRING, COMPRESSION RESSORT, COMPRESSION	1	1				
23	648–42715–00	BUSHING COUSSINET	1	1				
24	663–48344–00	CABLE END, REMOTE CONTROL CHAPE CABLE	1	1				
25	90468–18008	CLIP JONC	1	1				
26	67F–42154–00–94	LEVER, THROTTLE CONTROL LEVIER DE COMMANDE D'AVANCE	1	1				
27	663–85518–00	JOINT, BALL JOINT SPHERIQUE	1	1				

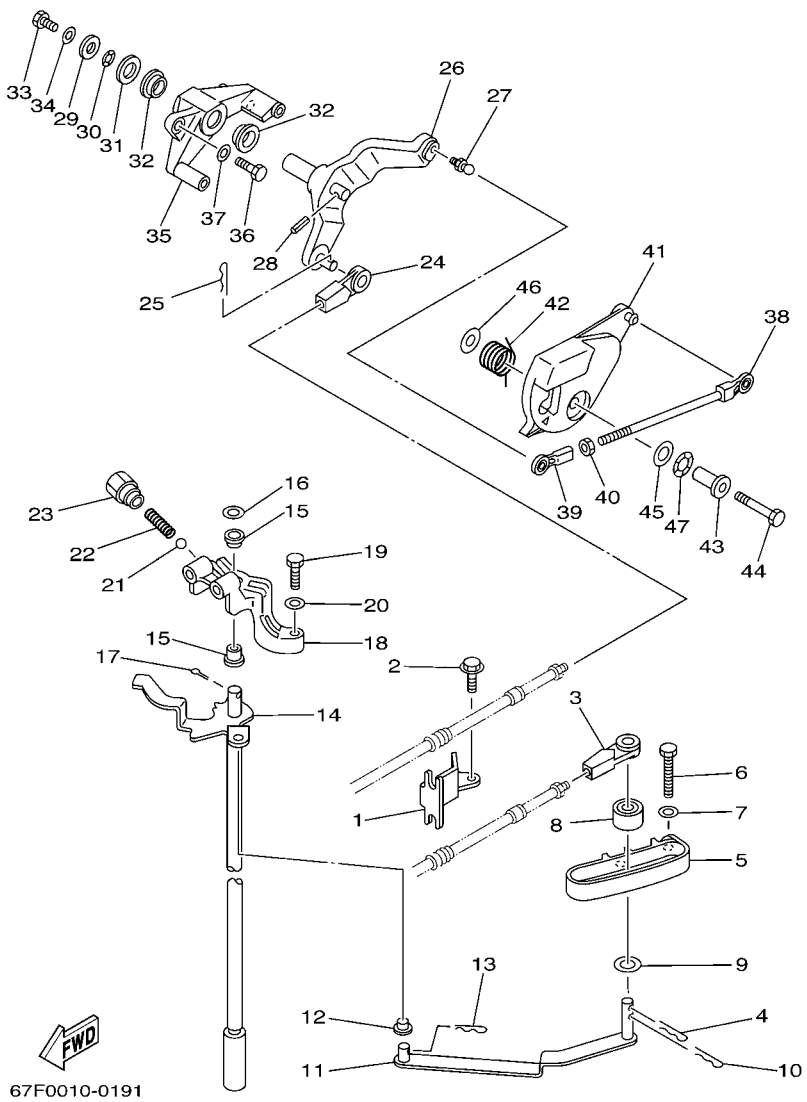

FIG. 21 CONTROL COMMANDE

REF. NO.	PART NO. N° PIECES	DESCRIPTION DESCRIPTION	F80	F100				REMARKS REMARQUES
28	91690–30018	PIN, SPRING AGRAFFE	1	1				
29	90201–06068	WASHER, PLATE RONDELLE, PLATE	1	1				
30	90206–12M00	WASHER, WAVE RONDELLE, ONDULEE	1	1				
31	92990–12600	WASHER, PLATE RONDELLE, PLATE	1	1				
32	90386–12069	BUSH DOUILLE	2	2				
33	97095–06012	BOLT BOULON	1	1				
34	92995–06600	WASHER RONDELLE	1	1				
35	67F–41661–00–94	BRACKET SUPPORT	1	1				
36	97095–06025	BOLT BOULON	2	2				
37	92995–06600	WASHER RONDELLE	2	2				
38	67F–41237–00	JOINT, LINK RACCORD	1	1				
39	682–41237–00	JOINT, LINK RACCORD	1	1				
40	95380–05600	NUT ECROU	1	1				
41	67F–41213–01	CAM, ACCEL. CAME, ACCELERATION	1	1				
42	67F–44135–00	SPRING RESSORT	1	1				
43	90387–06M82	COLLAR COLLERETTE	1	1				
44	97095–06035	BOLT BOULON	1	1				
45	90201–10M02	WASHER, PLATE RONDELLE, PLATE	1	1				
46	90201–06M31	WASHER, PLATE RONDELLE, PLATE	1	1				
47	90206–10M04	WASHER, WAVE RONDELLE, ONDULEE	1	1				

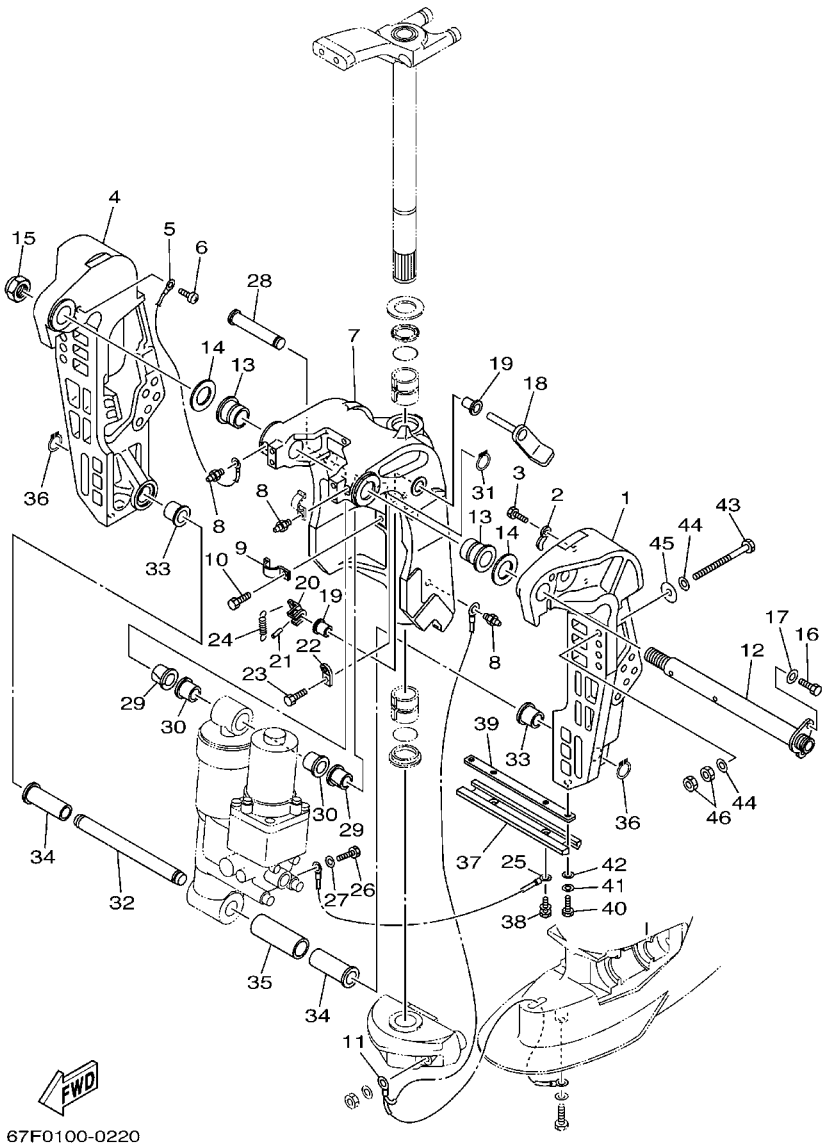

FIG. 22 BRACKET 1 SUPPORT 1

REF. NO.	PART NO. N° PIECES	DESCRIPTION DESCRIPTION	F80	F100				REMARKS REMARQUES
1	67F–43111–00–4D	BRACKET, CLAMP PRESSE	1	1				
2	90465–10M77	CLAMP BRIDE	2	2				
3	97095–06010	BOLT BOULON	2	2				
4	67F–43112–00–4D	BRACKET, CLAMP PRESSE	1	1				
5	6E5–82148–00	WIRE, LEAD 4 FIL 4	1	1				
6	97880–06012	SCREW, PAN HEAD VIS, TETE TRONCONIQUE	1	1				
7	67F–43311–10–4D	BRACKET, SWIVEL 1 SUPPORT, PIVOT 1	1	1				
8	93700–06M03	NIPPLE, GREASE PION	3	3				
9	90465–08M63	CLAMP BRIDE	1	1				
10	97095–06010	BOLT BOULON	1	1				
11	67F–82127–00	WIRE, LEAD 2 FIL 2	1	1				
12	64E–43131–01	BOLT, CLAMP BRACKET BOULON, PRESSE	1	1				
13	90386–25M31	BUSH DOUILLE	2	2				
14	90201–26M59	WASHER, PLATE RONDELLE, PLATE	2	2				
15	90185–22M11	NUT, SELF-LOCKING ECROU, AUTO-BLOCANT	1	1				
16	97095–08020	BOLT BOULON	1	1				
17	92995–08100	WASHER RONDELLE	1	1				
18	67F–43181–00	LEVER, TILT STOP LEVIER, VERROUILLAGE RELEVAGE	1	1				
19	90386–10M16	BUSH DOUILLE	2	2				
20	67F–43631–00	LEVER, TILT LEVIER, INCLINAISON	1	1				
21	91690–30020	PIN, SPRING AGRAFFE	1	1				
22	66T–43144–00	HOOK, SPRING CROCHET	1	1				
23	97095–06010	BOLT BOULON	1	1				
24	90506–14M24	SPRING, TENSION RESSORT, TENSION	1	1				
25	67F–82148–00	WIRE, LEAD 4 FIL 4	1	1				
26	97095–06010	BOLT BOULON	1	1				
27	92995–06600	WASHER RONDELLE	1	1				

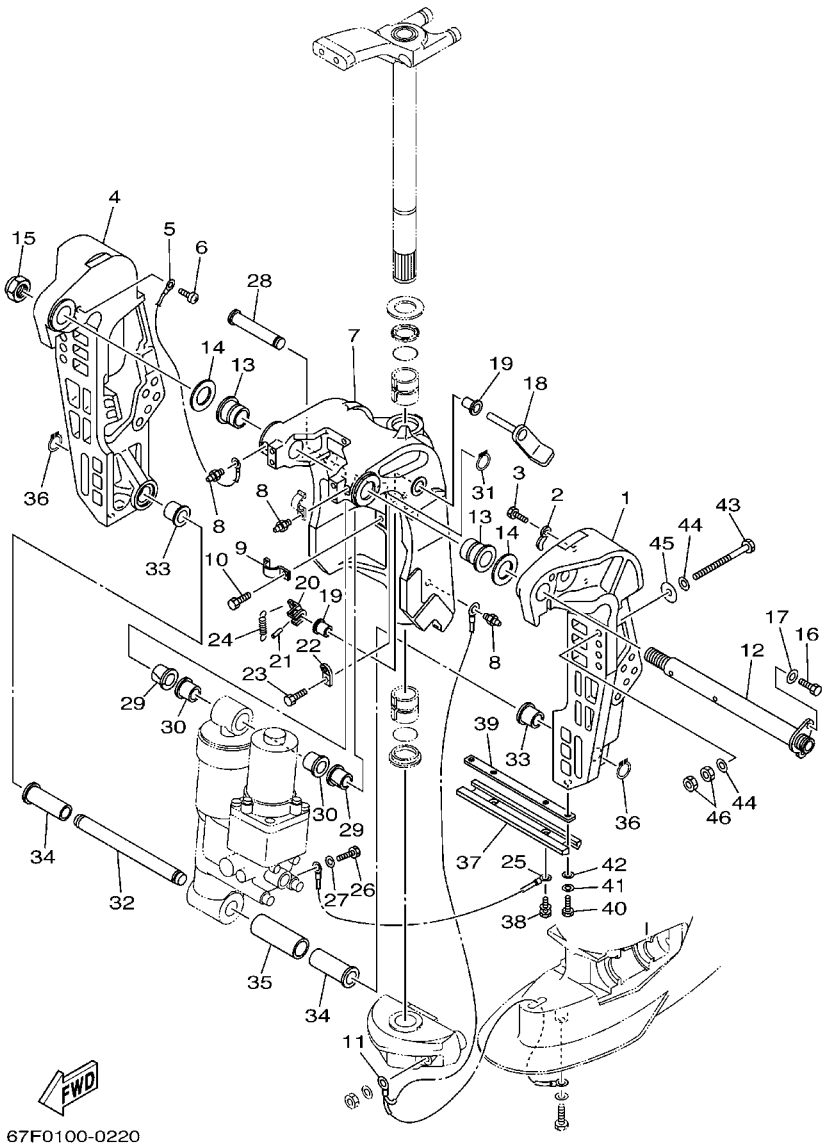

FIG. 22 BRACKET 1 SUPPORT 1

REF. NO.	PART NO. N° PIECES	DESCRIPTION DESCRIPTION	F80	F100				REMARKS REMARQUES
28	67F–43126–00	PIN, UPPER SHOCK MOUNT AXE, SUPERIEUR AMORTISSEUR	1	1				
29	90386–18M35	BUSH DOUILLE	2	2				
30	90386–18M63	BUSH DOUILLE	2	2				
31	93410–18M05	CIRCLIP CLIPS	1	1				
32	67F–43818–00	PIN, LOWER SHOCK MOUNT AXE, INFERIEUR AMORTISSEUR	1	1				
33	90387–18M01	COLLAR COLLERETTE	2	2				
34	90386–18MA0	BUSH DOUILLE	2	2				
35	90387–22M01	COLLAR COLLERETTE	1	1				
36	93410–18M05	CIRCLIP CLIPS	2	2				
37	6H1–45251–03	ANODE ANODE	1	1				
38	90119–06M81	BOLT, WITH WASHER BOULON, AVEC RONDELLE	2	2				
39	6H1–44526–00	PLATE PLAQUE	1	1				
40	97095–06016	BOLT BOULON	2	2				
41	92995–06100	WASHER, SPRING RONDELLE, GROWER	2	2				
42	92995–06600	WASHER RONDELLE	2	2				
43	90101–12M03	BOLT (L:115MM) BOULON (L:115MM)	4	4				
44	90201–13M01	WASHER, PLATE RONDELLE, PLATE	8	8				
45	90201–12M05	WASHER, PLATE RONDELLE, PLATE	4	4				
46	95380–12600	NUT ECROU	8	8				

FIG. 23 BRACKET 2 SUPPORT 2

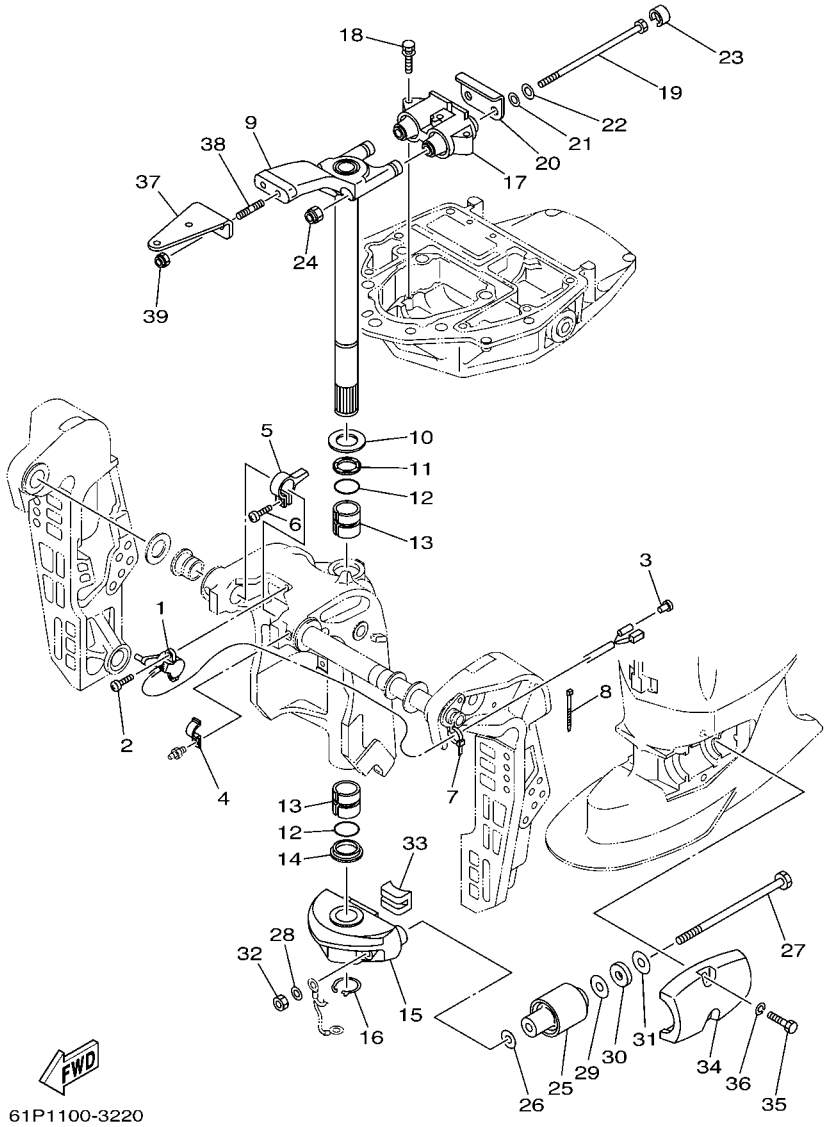

REF. NO.	PART NO. N° PIECES	DESCRIPTION DESCRIPTION	F80	F100				REMARKS REMARQUES
1	64E–83672–02	TRIM SENDER INCLINER RACCORD	1	1				
2	97885–06016	SCREW, PAN HEAD VIS, A ENCOCHE	2	2				
3	703–82119–00	COVER, LEAD WIRE GARNITURE, FIL	1	1				
4	90465–08M63	CLAMP BRIDE	1	1				
5	64E–43139–02	CAM, TRIM SENDER VILEBREQUIN TRUM	1	1				
6	97780–60525	SCREW, TAPPING VIS, TETE BOMBEE	1	1				
7	90465–11M10	CLAMP BRIDE	1	1				
8	90465–11M10	CLAMP BRIDE	3	3				
9	67F–42510–10–4D	STEERING BRACKET ASSY DIRECTION SUPPORT (ENS.)	1	1				
10	90201–30M00	WASHER, PLATE RONDELLE, PLATE	1	1				
11	90386–30M78	BUSH DOUILLE	1	1				
12	93210–29M94	O-RING JOINT TORIQUE	2	2				
13	90386–30M77	BUSH DOUILLE	2	2				
14	90386–30M60	BUSH DOUILLE	1	1				
15	67F–44551–00–4D	HOUSING, LOWER MOUNT RUBBER BOITIER, SILENT-BLOC INFERIEUR	1	1				
16	93410–28M06	CIRCLIP CLIPS	1	1				
17	67F–44514–00–94	MOUNT DAMPER, UPPER SIDE SILENT-BLOC, SUPERIEUR LATERAL	1	1				
18	97575–08445	BOLT, WITH WASHER VIS HEXAGONAL AVC RONDELLE	3	3				
19	90109–12M37	BOLT BOULON	2	2				
20	67F–44526–00	PLATE PLAQUE	1	1				
21	90201–12M16	WASHER, PLATE RONDELLE, PLATE	2	2				
22	90201–13M01	WASHER, PLATE RONDELLE, PLATE	2	2				
23	67F–44533–00	DAMPER, UPPER MOUNT RUBBER COUVERCLE, SUSPENSION INFERIEU	2	2				
24	95780–12300	NUT, FLANGE ECROU	2	2				
25	67F–44555–00–94	MOUNT DAMPER, LOWER SIDE SILENT-BLOC, INFERIEUR LATERAL	2	2				
26	90201–13M03	WASHER, PLATE RONDELLE, PLATE	2	2				
27	90109–12M97	BOLT BOULON	2	2				

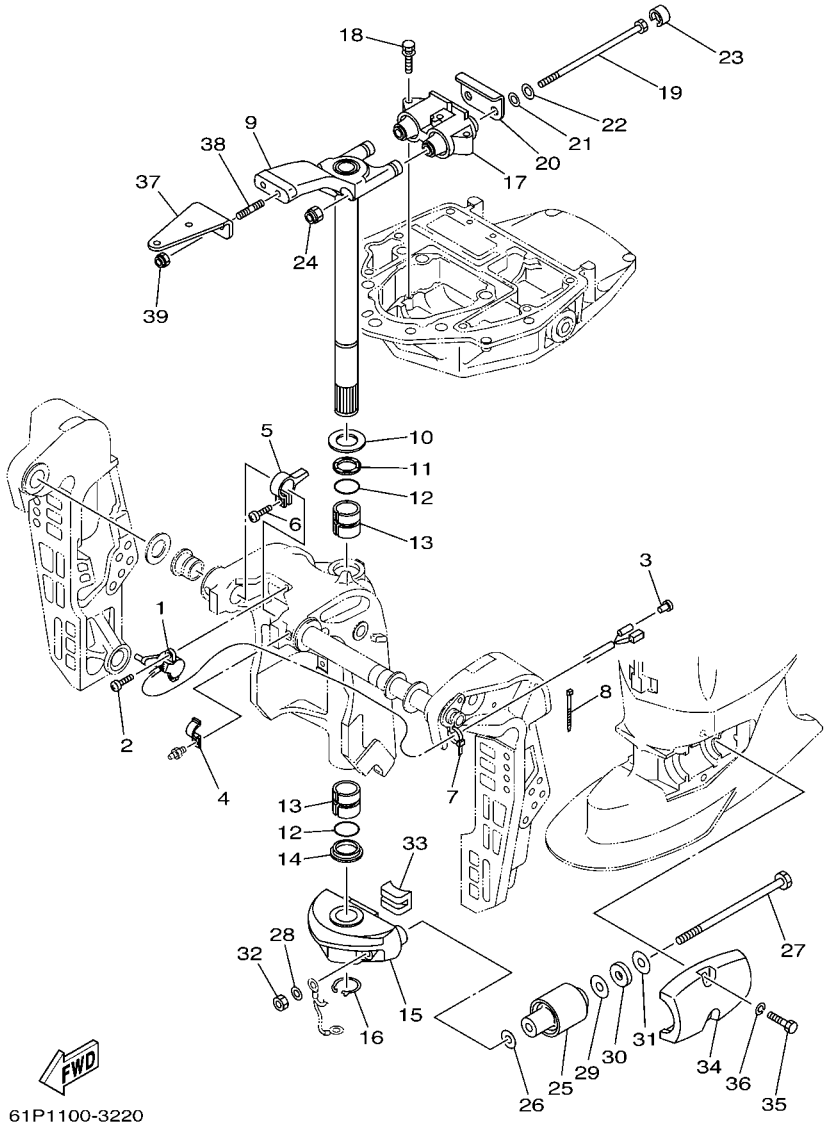

FIG. 23 BRACKET 2 — SUPPORT 2

REF. NO.	PART NO. N° PIECES	DESCRIPTION DESCRIPTION	F80	F100				REMARKS REMARQUES
28	90201–12M16	WASHER, PLATE RONDELLE, PLATE	2	2				
29	90201–24M02	WASHER, PLATE RONDELLE, PLATE	2	2				
30	90202–25M04	WASHER, PLATE RONDELLE, PLATE	2	2				
31	90201–13M19	WASHER, PLATE RONDELLE, PLATE	2	2				
32	95380–12700	NUT ECROU	2	2				
33	67F–44575–00	DAMPER, LOWER MOUNT RUBBER SILENT-BLOC, INFERIEUR	1	1				
34	67F–44553–00–4D	COVER, LOWER MOUNT COUVERCLE, SUSPENSION INFERIEU	2	2				
35	97075–10040	BOLT BOULON	4	4				
36	92995–10100	WASHER RONDELLE	4	4				
37	67F–48511–00–4D	HOOK, STEERING ATTACHE, DIRECTION	1	1				
38	90116–10175	BOLT, STUD GOUJON	2	2				
39	90185–10051	NUT, SELF-LOCKING ECROU, AUTO-BLOCANT	2	2				

FIG. 24 OPTIONAL PARTS PIECES OPTIONNELLES

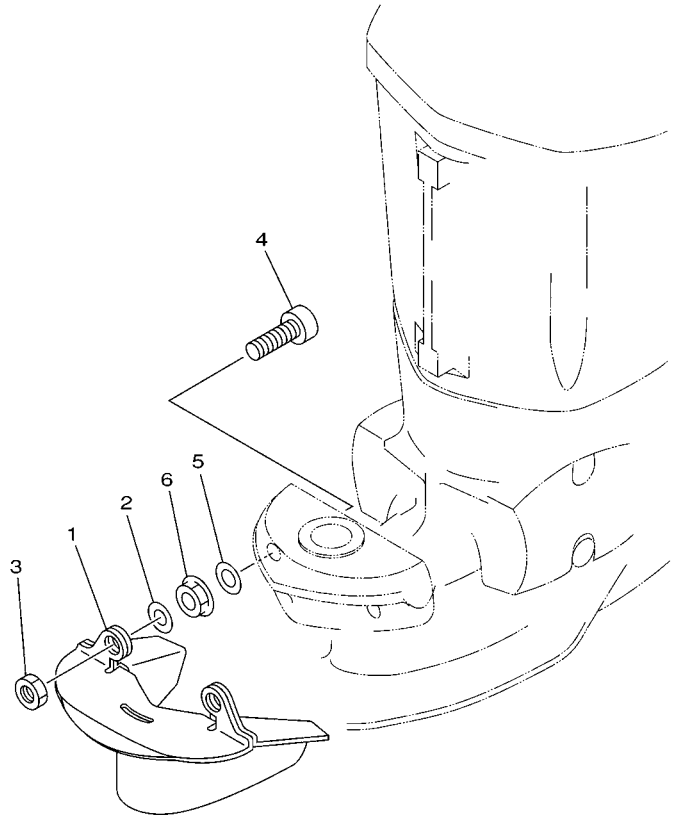

67F0100-0240

REF. NO.	PART NO. N° PIECES	DESCRIPTION DESCRIPTION	F80	F100				REMARKS REMARQUES
1	67F–45180–00–4D	PLATE, SPLASH PLAQUE, EAU	1	1				AP AP
2	90201–12M01	WASHER, PLATE RONDELLE, PLATE	2	2				AP AP
3	95380–12700	NUT ECROU	2	2				AP AP
4	90110–12M00	BOLT, HEXAGON SOCKET HEAD BOULON, TETE HEXAGONALE CREUSE	2	2				AP AP
5	90201–12M16	WASHER, PLATE RONDELLE, PLATE	2	2				AP AP
6	95780–12300	NUT, FLANGE ECROU	2	2				AP AP

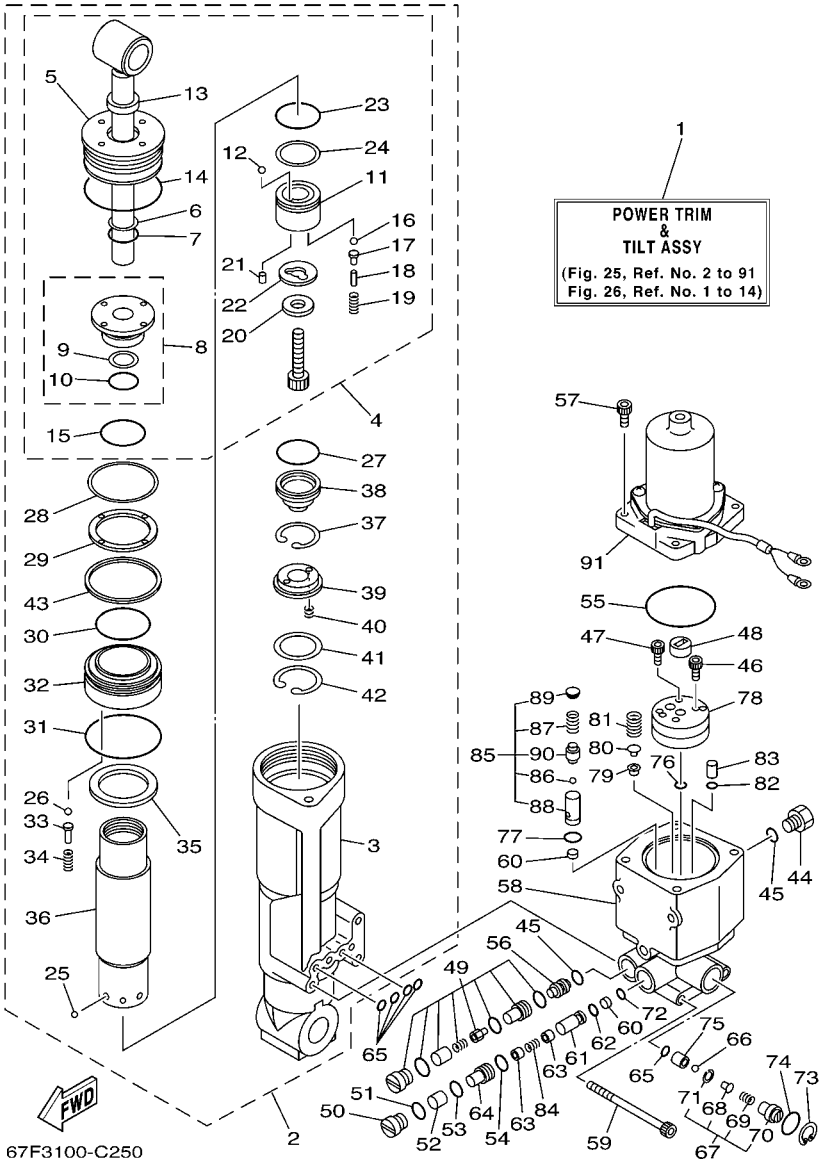

FIG. 25 POWER TRIM & TILT ASSY 1 PUISSANCE PARER ET INCLINER 1

REF. NO.	PART NO. N° PIECES	DESCRIPTION DESCRIPTION	F80	F100				REMARKS REMARQUES
1	67F–43800–03–4D	POWER TRIM & TILT ASSY PUISSANCE PARER ET INCLINER (ENS.)	1	1				
2	67F–43840–02	POWER TILT ASSY PUISSANCE INCLINER (ENS.)	1	1				
3	67F–4380K–00	.CYLINDER, TILT SUB ASSY .CYLINDRE	1	1				
4	67F–43810–01	.TILT PISTON SUB ASSY .INCLINER PISTON AUXILIAIRE(ENS.)	1	1				
5	67F–43821–00	..SCREW, TRIM CYLINDER END ..VIS	1	1				
6	6H1–43872–10	..RING, BACK UP ..RESSORT	1	1				
7	93210–18397	..O-RING ..JOINT TORIQUE	1	1				
8	67F–4380R–00	..CYLINDER END SUB ASSY ..CYLINDRE RACCORD (ENS.)	1	1				
9	6H1–43872–10	...RING, BACK UP ...RESSORT	1	1				
10	93210–18397	...O-RING ...JOINT TORIQUE	1	1				
11	67F–4385A–01	..PISTON, TILT ..PISTON	1	1				
12	93501–08001	..BALL ..BILLE	1	1				
13	6H1–43812–00	..SEAL, DUST ..JOINT	1	1				
14	67F–43861–00	..O-RING ..JOINT TORIQUE	1	1				
15	62X–43862–00	..O-RING ..JOINT TORIQUE	1	1				
16	93501–08001	..BALL ..BILLE	2	2				
17	65W–4386A–00	..PIN, ABSORBER VALVE ..GOUPILLE, SOUPAPE	2	2				
18	688–4386F–00	..PIN, STRAIGHT ..RESSORT	2	2				
19	65W–43853–00	..SPRING, MAIN VALVE ..RESSORT	2	2				
20	67F–43893–00	..WASHER ..RONDELLE	1	1				
21	93602–07244	..PIN, DOWEL ..GOUJON	2	2				
22	67F–22435–00	..PLATE, VALVE 2 ..PLAQUE, CLAPET 2	1	1				
23	93210–29375	..O-RING ..JOINT TORIQUE	1	1				
24	62X–43871–00	..RING, BACK UP ..SEGMENT	1	1				
25	93503–16003	.BALL .BILLES	6	6				
26	93501–08001	.BALL .BILLE	5	5				
27	67F–43863–00	.O-RING .JOINT TORIQUE	1	1				

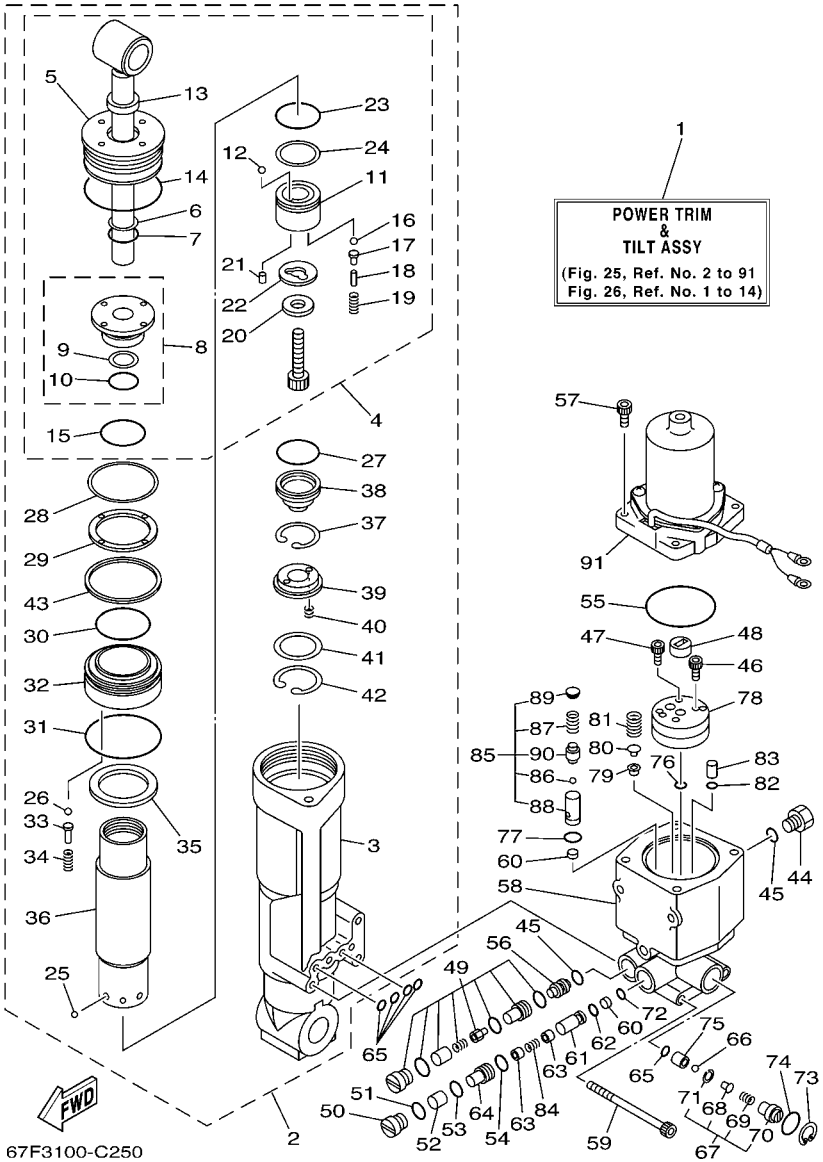

FIG. 25 POWER TRIM & TILT ASSY 1 PUISSANCE PARER ET INCLINER 1

REF. NO.	PART NO. N° PIECES	DESCRIPTION DESCRIPTION	F80	F100				REMARKS REMARQUES
28	67F–43899–00	.PLATE STOPPER .PLAQUETTE	1	1				
29	67F–43816–00	.FILTER 1 .FILTRE 1	1	1				
30	67F–43862–00	.O-RING .JOINT TORIQUE	1	1				
31	62X–43865–00	.O-RING .JOINT TORIQUE	1	1				
32	67F–4388A–00	.PISTON, TRIM .PISTON	1	1				
33	6T4–4386A–00	.PIN, ABSORBER VALVE .GOUPILLE, SOUPAPE	5	5				
34	67F–43857–00	.SPRING, ABSORBER VALVE .RESSORT	5	5				
35	67F–4381J–00	.PLATE .PLAQUE	1	1				
36	67F–22471–01	.CYLINDER, SHOCK ABSORBER .CYLINDRE, AMORTISSEUR	1	1				
37	67F–43875–00	.RING, SNAP .RESSORT	1	1				
38	67F–4381B–00	.FREE PISTON SUB ASSY .PISTON AUXILIAIRE (ENS.)	1	1				
39	62X–43899–00	.PLATE STOPPER .PLAQUETTE	1	1				
40	62X–4384H–00	.SPRING .RESSORT	2	2				
41	1UF–22434–00	.PLATE, VALVE 1 .PLATEAU, SOUPAPE 1	1	1				
42	62X–43875–00	.RING, SNAP .RESSORT	1	1				
43	67F–43871–00	.RING, BACK UP .SEGMENT	1	1				
44	6H1–43829–00	PLUG, RESERVOIR BOUCHON	1	1				
45	93210–09165	O-RING JOINT TORIQUE	2	2				
46	91318–06035	BOLT BOULON	3	3				
47	91318–06020	BOLT BOULON	1	1				
48	6H1–43831–10	CONNECTOR, SHAFT RACCORD	1	1				
49	67F–43802–00	VALVE SUB ASSY CLAPET AUXILIAIRE (ENS.)	2	2				
50	67F–4382F–00	ADAPTOR 3 ADAPTEUR 3	1	1				
51	6H1–43866–00	O-RING JOINT TORIQUE	1	1				
52	67F–43817–00	FILTER 2 FILTRE 2	1	1				
53	93210–10M74	O-RING JOINT TORIQUE	1	1				
54	6H1–43867–00	O-RING JOINT TORIQUE	1	1				

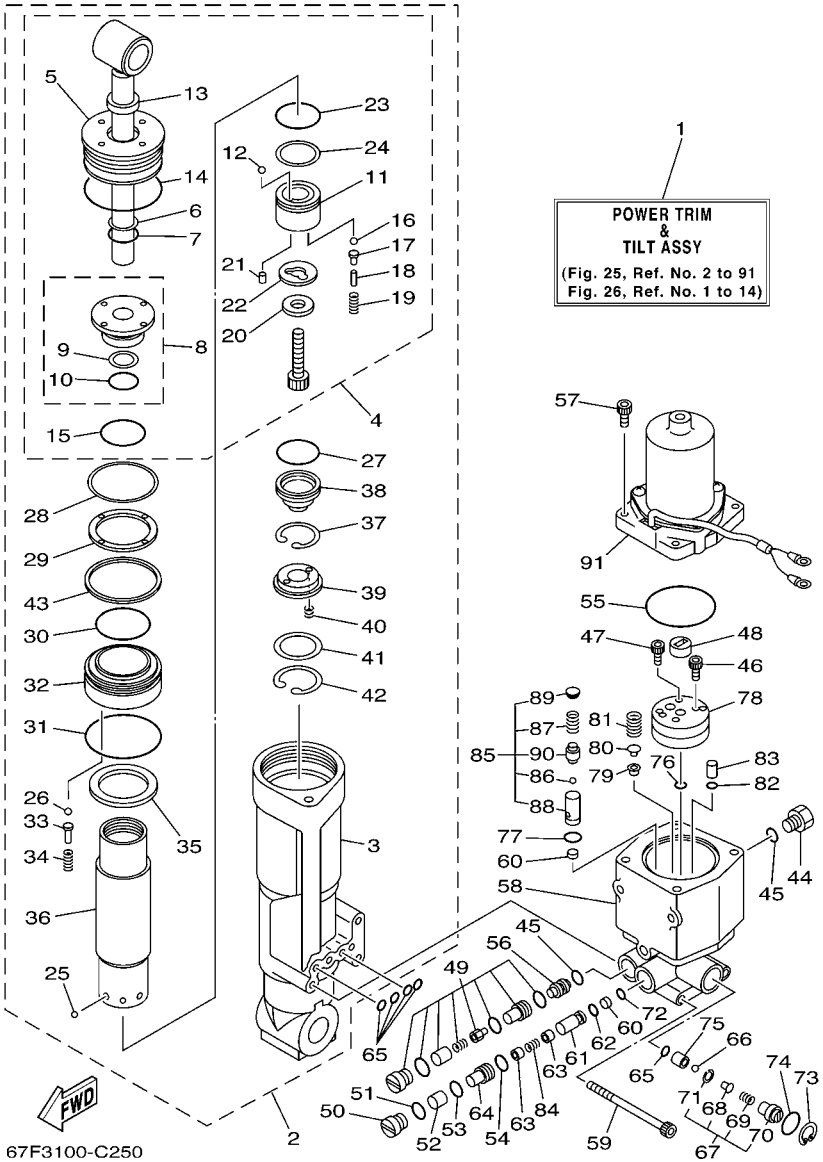

FIG. 25 POWER TRIM & TILT ASSY 1 PUISSANCE PARER ET INCLINER 1

REF. NO.	PART NO. N° PIECES	DESCRIPTION DESCRIPTION	F80	F100				REMARKS REMARQUES
55	62X–43865–00	O-RING JOINT TORIQUE	1	1				
56	62X–43841–00	PISTON, SHUTTLE PISTON	1	1				
57	65W–43888–00	BOLT, SOCKET BOULON	4	4				
58	67F–43825–03	HOUSING, TRIM & TILT CARTER	1	1				
59	62X–43878–00	BOLT, SOCKET BOULON	3	3				
60	6H1–43816–00	FILTER 1 FILTRE 1	2	2				
61	67F–43851–00	SEAT, RELIEF VALVE SIEGE	1	1				
62	93210–07003	O-RING JOINT TORIQUE	1	1				
63	67F–43808–00	SEAT VALVE COMP. 1 SIEGE VALVE COMP. 1	2	2				
64	67F–4382G–00	SCREW, VALVE SEAT VIS, JEU DE POINTEAUX	1	1				
65	93210–064A5	O-RING JOINT TORIQUE	5	5				
66	93505–32038	BALL BILLE	1	1				
67	61A–43860–20	MANUAL VALVE SUB-ASSY SOUPAPE, MANUEL (ENS.)	1	1				
68	61A–43848–00	.ROD, MANUAL RELEASE .TIGE	1	1				
69	61A–43854–00	.SPRING, MANUAL RELEASE .RESSORT	1	1				
70	61A–43845–00	.SCREW, MANUAL RELEASE .VIS	1	1				
71	61A–43875–00	.RING, SNAP .RESSORT	1	1				
72	93210–06100	O-RING JOINT TORIQUE	1	1				
73	6H1–43875–00	RING, SNAP RESSORT	1	1				
74	93210–18397	O-RING JOINT TORIQUE	1	1				
75	61A–43847–00	SEAT, MANUAL VALVE SIEGE	1	1				
76	65W–43862–00	O-RING JOINT TORIQUE	2	2				
77	93210–11368	O-RING JOINT TORIQUE	1	1				
78	67F–43830–00	GEAR PUMP ASSY POMPE A PIGNON (ENS.)	1	1				
79	6H1–4384F–10	SEAL, MAIN VALVE JOINT	1	1				
80	6H1–43844–10	PIN, VALVE SUPPORT GOUPILLE	1	1				
81	6H1–43856–10	SPRING, DOWN RELIEF RESSORT	1	1				

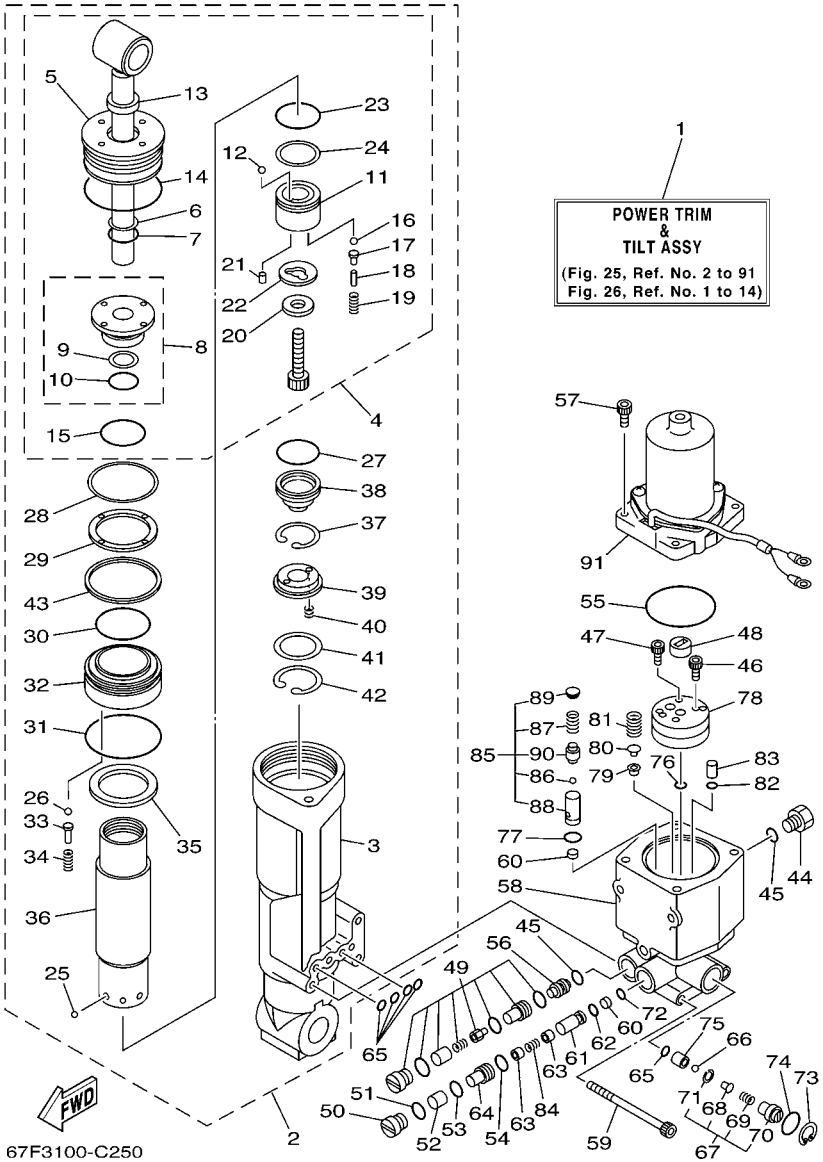

FIG. 25 POWER TRIM & TILT ASSY 1 PUISSANCE PARER ET INCLINER 1

REF. NO.	PART NO. N° PIECES	DESCRIPTION DESCRIPTION	F80	F100				REMARKS REMARQUES
82	65W–43861–00	O-RING JOINT TORIQUE	2	2				
83	65W–43817–00	FILTER 2 FILTRE 2	2	2				
84	67F–4385H–00	SPRING, SEAL RESSORT	1	1				
85	67F–43850–00	VALVE SUB ASSY CLAPET AUXILIAIRE (ENS.)	1	1				
86	93501–08001	.BALL .BILLE	1	1				
87	6H1–43856–10	.SPRING, DOWN RELIEF .RESSORT	1	1				
88	67F–43895–00	.SEAT, RELIEF VALVE .SIEGE	1	1				
89	67F–43843–00	.SCREW, VALVE LOCK .VIS	1	1				
90	67F–4386A–00	.PIN, ABSORBER VALVE .GOUPILLE, SOUPAPE	1	1				
91	67F–43880–00	MOTOR ASSY MOTEUR (ENS.)	1	1				REFER TO FIG.26 REFER TO FIG.26

FIG. 26 POWER TRIM & TILT ASSY 2 PUISSANCE PARER ET INCLINER 2

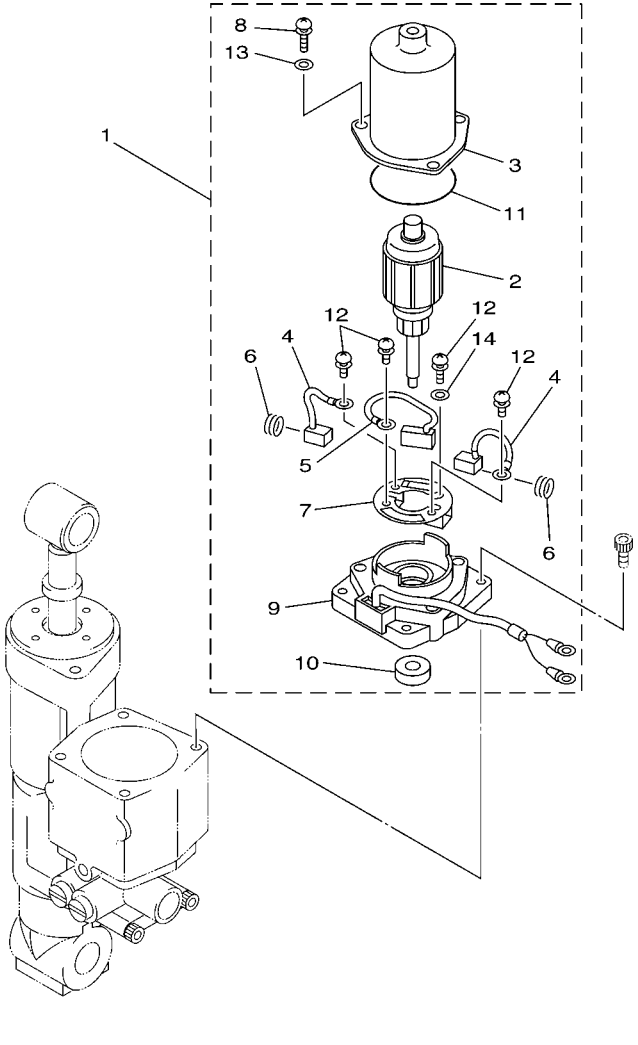

67F3100-C260

REF. NO.	PART NO. N° PIECES	DESCRIPTION DESCRIPTION	F80	F100				REMARKS REMARQUES
1	67F–43880–00	MOTOR ASSY MOTEUR (ENS.)	1	1				
2	67F–43805–00	.ARMATURE ASSY .INDUIT (ENS.)	1	1				
3	67F–43804–00	.STATOR ASSY .STATOR (ENS.)	1	1				
4	67F–43891–00	.BRUSH 1 .BALAI 1	2	2				
5	67F–82181–00	.CIRCUIT BREAKER COMP. .RUPTEUR COMPLET	1	1				
6	67F–4386K–00	.SPRING, BRUSH .RESSORT, BALAI	2	2				
7	67F–4380F–00	.PLATE, BRUSH HOLDER .PLAQUE	1	1				
8	67F–43886–00	.BOLT .BOULON	3	3				
9	67F–43881–00	.FRAME, END .BATI	1	1				
10	67F–43882–00	.OIL SEAL .JOINT SPI	1	1				
11	67F–43896–00	.O-RING .JOINT TORIQUE	1	1				
12	67F–43879–00	.SCREW, WITH WASHER .VIS, AVEC RONDELLE	4	4				
13	67F–4387G–00	.WASHER .RONDELLE	3	3				
14	67F–4387J–00	.WASHER, SPECIAL 2 .RONDELLE	1	1				

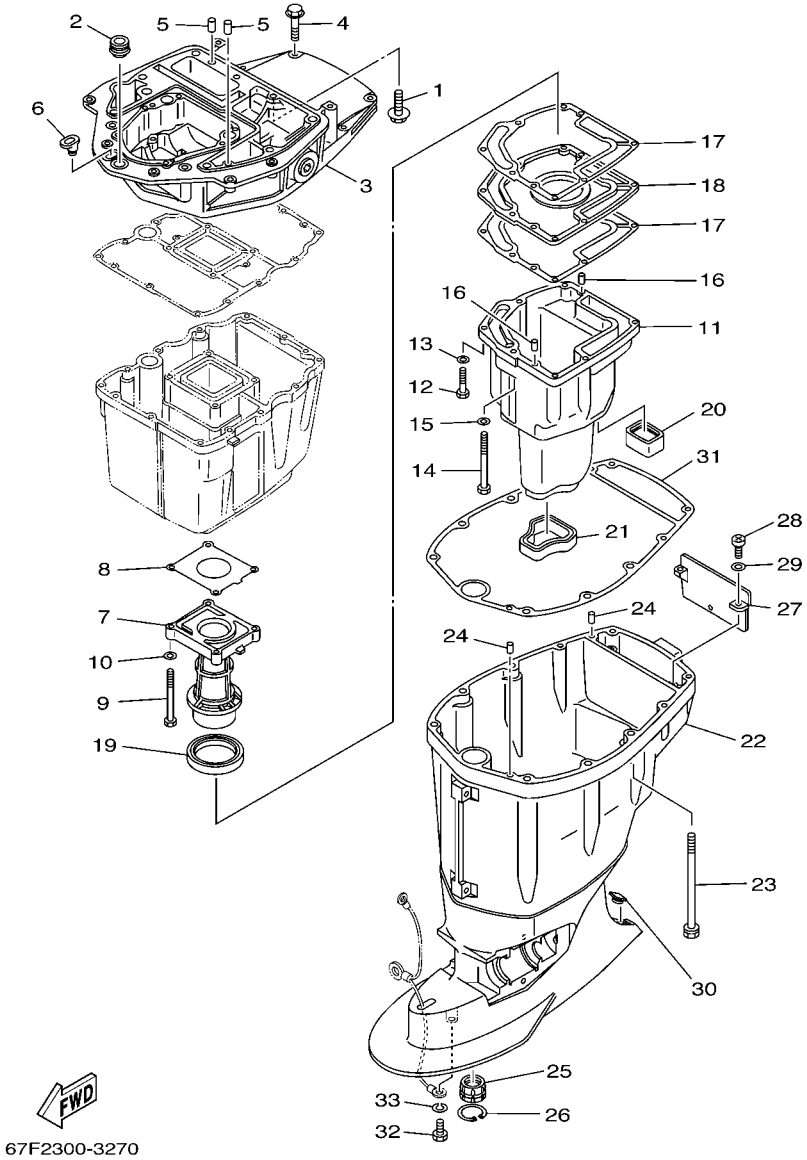

FIG. 27 UPPER CASING FOURREAU

REF. NO.	PART NO. N° PIECES	DESCRIPTION DESCRIPTION	F80	F100				REMARKS REMARQUES
1	90119–08M58	BOLT, WITH WASHER BOULON, AVEC RONDELLE	2	2				
2	67F–42724–00	GROMMET PASSE-FIL	1	1				
3	67F–41137–02–94	GUIDE, EXHAUST COLLECTEUR D'ECHAPPEMENT	1	1				
4	97575–08540	BOLT, WITH WASHER VIS HEXAGONAL AVC RONDELLE	4	4				
5	93608–16M16	PIN, DOWEL AXE	2	2				
6	6G1–42727–00	GROMMET PASSE-FIL	1	1				
7	67F–41131–01–5B	MANIFOLD, EXT. 1 PIPE D'ECHAPPEMENT	1	1				
8	67F–41133–A1	GASKET, EXHAUST MANIFOLD 1 JOINT, PIPE D'ECHAPPEMENT	1	1				
9	97075–06070	BOLT BOULON	4	4				
10	92995–06600	WASHER RONDELLE	4	4				
11	67F–14711–00–5B	MUFFLER 1 POT D'ECHAPPEMENT 1	1	1				
12	97075–06030	BOLT BOULON	6	6				
13	92995–06600	WASHER RONDELLE	6	6				
14	97075–06050	BOLT BOULON	1	1				
15	92995–06600	WASHER RONDELLE	1	1				
16	93606–19M23	PIN, DOWEL GOUPILLE	2	2				
17	67F–41134–A0	GASKET, EXHAUST MANIFOLD JOINT, PIPE D'ECHAPPEMENT	2	2				
18	67F–45181–00–5B	PLATE PLAQUETTE	1	1				
19	67F–41138–00	SEAL, EXT. 1 JOINT DE GROUPE 1	1	1				
20	67F–45127–00	SEAL JOINT	1	1				
21	67F–45123–00	GASKET, MUFFLER JOINT, POT DE DETENTE	1	1				
22	67F–45111–10–4D	CASING, UPPER FOURREAU	1	1				
23	90119–10M08	BOLT, WITH WASHER BOULON, AVEC RONDELLE	6	6				
24	93608–16M16	PIN, DOWEL AXE	2	2				
25	67F–45318–00	BUSHING, DRIVE SHAFT DOUILLE, ARBRE MOTEUR	1	1				
26	93420–36M01	CIRCLIP CIRCLIP	1	1				
27	67F–45151–00	COVER, UPPER CASING CAPUCHON, FOURREAU	1	1				

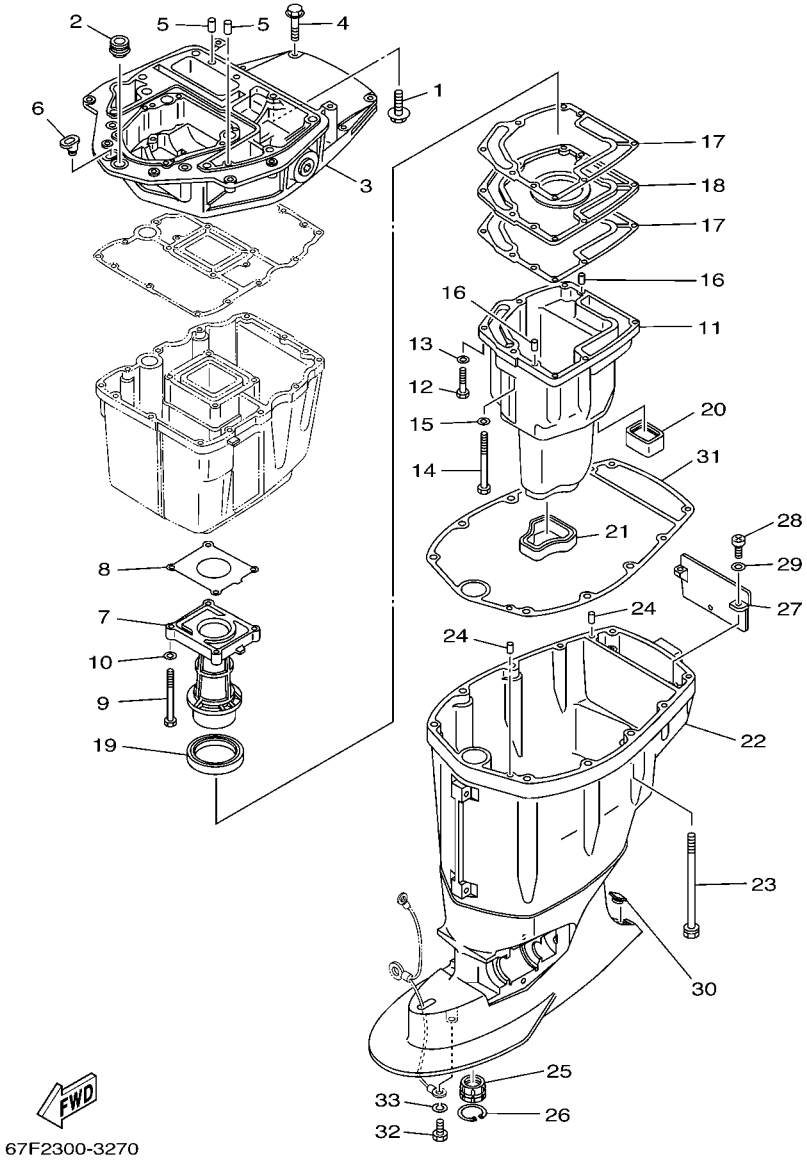

FIG. 27 UPPER CASING FOURREAU

REF. NO.	PART NO. N° PIECES	DESCRIPTION DESCRIPTION	F80	F100				REMARKS REMARQUES
28	97880–06016	SCREW, PAN HEAD VIS, TETE TRONCONIQUE	2	2				
29	92990–06600	WASHER, PLATE RONDELLE, PLATE	2	2				
30	67F–45155–00	CAP CAPUCHON	1	1				
31	67F–45113–00	GASKET, UPPER CASING JOINT, TUBE D'ARBRE	1	1				
32	97095–08016	BOLT BOULON	1	1				
33	92995–08100	WASHER RONDELLE	1	1				

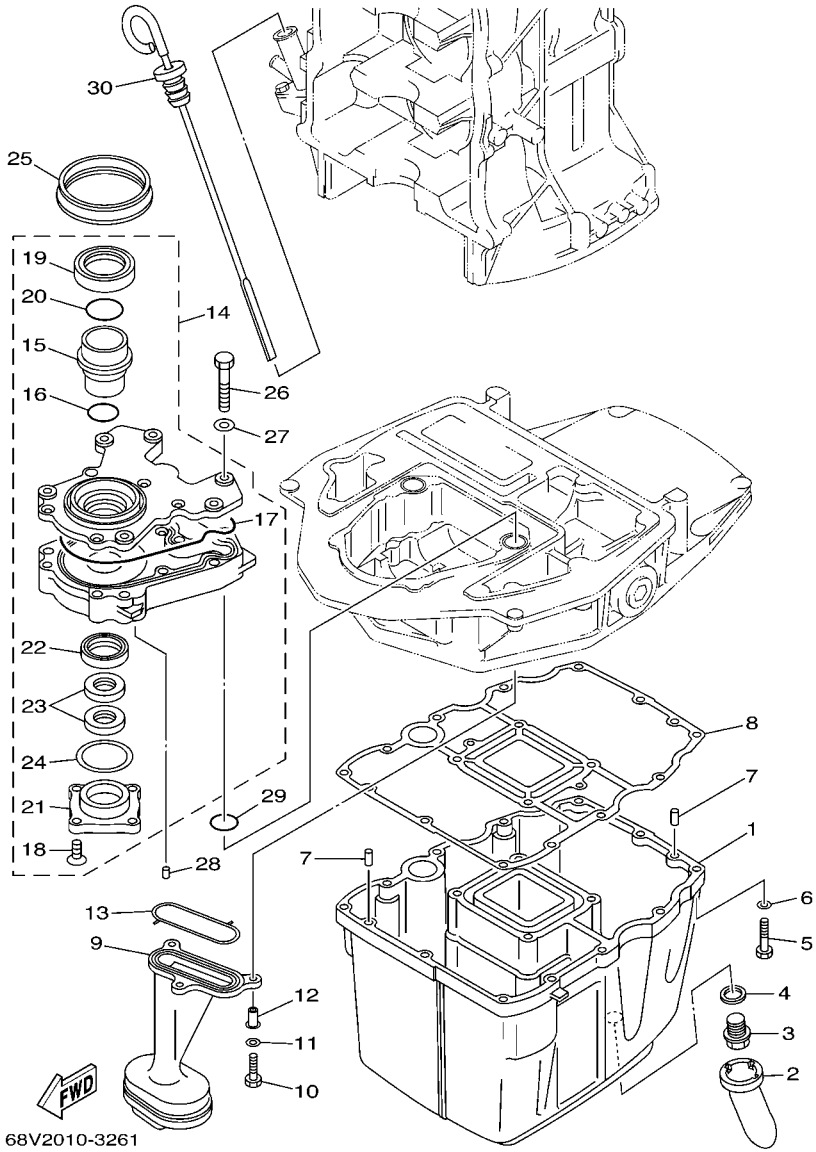

FIG. 28 OIL PAN — VENTILATEUR D'HUILE

REF. NO.	PART NO. N° PIECES	DESCRIPTION DESCRIPTION	F80	F100				REMARKS REMARQUES
1	67F–15311–01–5B	OIL PAN VENTILATEUR D'HUILE	1	1				
2	67F–15316–00	DAMPER 1 AMORTISSEUR 1	1	1				
3	90340–14M06	PLUG, STRAIGHT SCREW PLOT, FILETE DROIT	1	1				
4	90430–14M09	GASKET JOINT	1	1				
5	97075–06025	BOLT BOULON	12	12				
6	92995–06600	WASHER RONDELLE	12	12				
7	93606–12019	PIN, DOWEL GOUPILLE	2	2				
8	68V–15312–00	GASKET, OIL PAN JOINT DE VENTILATEUR D'HUILE	1	1				
9	67F–13411–00	STRAINER, OIL FILTRE, HUILE	1	1				
10	97027–06025	BOLT BOULON	3	3				
11	92907–06600	WASHER, PLATE RONDELLE	3	3				
12	90387–06M64	COLLAR COLLERETTE	3	3				
13	67F–13415–00	SEAL, OIL STRAINER JOINT, FILTRE A HUILE	1	1				
14	67F–13300–10	OIL PUMP ASSY POMPE A HUILE COMPLETE	1	1				
15	67F–13314–02	.SHAFT, PUMP .AXE DE POMPE	1	1				
16	67F–13473–01	.O-RING .JOINT TORIQUE	1	1				
17	67F–13329–00	.GASKET, PUMP COVER .JOINT, COUVERCLE DE POMPE	1	1				
18	67F–13495–00	.SCREW .VIS	1	1				
19	67F–13119–01	.OIL SEAL .JOINT SPY	1	1				
20	67F–13769–00	.O-RING .JOINT TORIQUE	1	1				
21	67F–13914–00	.HOUSING, PUMP .CORPS, POMPE	1	1				
22	67F–13631–03	.OIL SEAL .JOINT SPY	1	1				
23	67F–13149–00	.OIL SEAL .JOINT SPY	2	2				
24	67F–13339–00	.GASKET, PUMP COVER .BAINT, COUVERCLE DE POME	1	1				
25	67F–13338–00	SEAL JOINT	1	1				
26	97095–06045	BOLT BOULON	6	6				
27	92995–06600	WASHER RONDELLE	6	6				

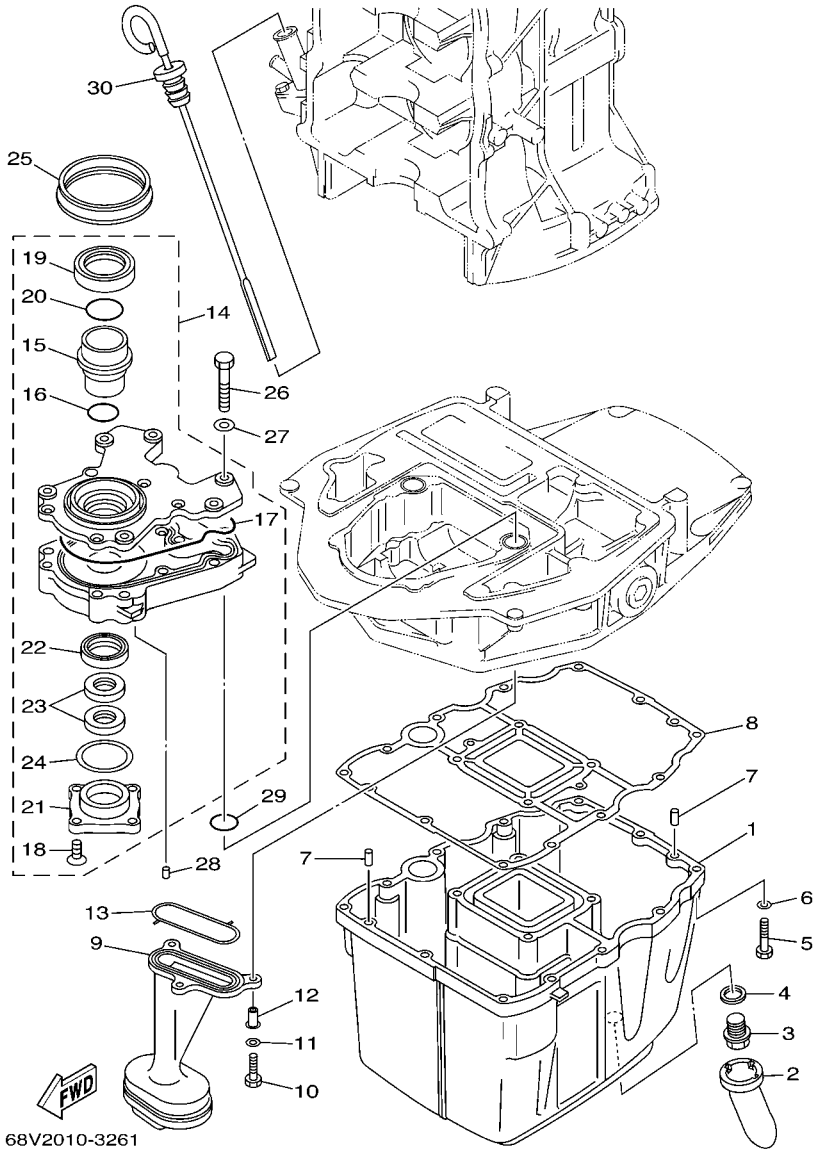

FIG. 28 OIL PAN — VENTILATEUR D'HUILE

REF. NO.	PART NO. N° PIECES	DESCRIPTION DESCRIPTION	F80	F100				REMARKS REMARQUES
28	93604–12M07	PIN, DOWEL CLAVETTE	2	2				
29	93210–19MJ1	O-RING JOINT TORIQUE	2	2				
30	68V–15362–10	PLUG, OIL LEVEL PLOT, NIVEAU D'HUILE	1	1				

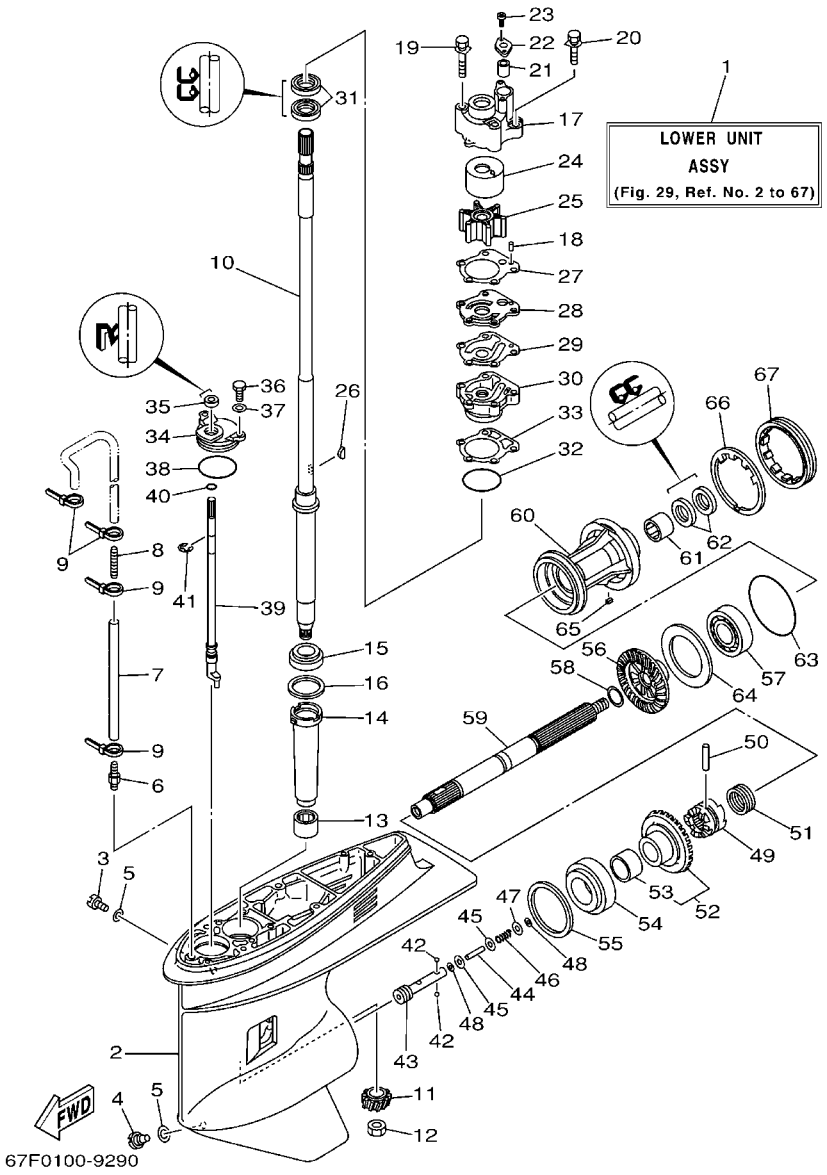

FIG. 29 LOWER CASING & DRIVE 1 BOITIER D'HELICE TRANSMISSION 1

REF. NO.	PART NO. N° PIECES	DESCRIPTION DESCRIPTION	F80	F100				REMARKS REMARQUES
1	67F–45300–10–4D	LOWER UNIT ASSY UNITE INFERIEURE (ENS.)	1	1				L L
2	67F–45301–00–4D	CASING, LOWER BEQUILLE	1	1				
3	90340–08002	PLUG, STRAIGHT SCREW PLOT, FILETE DROIT	1	1				
4	688–45341–10	PLUG, DRAIN BOUCHON DE VIDANGE	1	1				
5	90430–08020	GASKET JOINT	2	2				
6	6E5–45378–00	NIPPLE, HOSE RACCORD, TUYAU	1	1				
7	90445–07M31	HOSE (L200) DURITE (L200)	1	1				L L
8	6E5–83558–10	END, NIPPLE RACCORD DE NIPPLE	1	1				
9	90465–11M10	CLAMP BRIDE	4	4				
10	67F–45501–10	DRIVE SHAFT COMP. ARBRE MOTEUR COMP.	1	1				L L
11	67F–45551–00	PINION PIGNON D'ATTAQUE	1	1				
12	90170–16M01	NUT ECROU	1	1				
13	93315–325W4	BEARING ROULEMENT	1	1				
14	688–45536–01	SLEEVE, DRIVE SHAFT MANCHON, ARBRE MOTEUR	1	1				
15	93332–000U3	BEARING ROULEMENT	1	1				
16	688–45587–01–10	SHIM (T:0.10MM) CALE (T:0.10MM)	1	1				UR UR
	688–45587–01–12	SHIM (T:0.12MM) CALE (T:0.12MM)	1	1				UR UR
	688–45587–01–15	SHIM (T:0.15MM) CALE (T:0.15MM)	1	1				UR UR
	688–45587–01–18	SHIM (T:0.18MM) CALE (T:0.18MM)	1	1				UR UR
	688–45587–01–30	SHIM (T:0.30MM) CALE (T:0.30MM)	1	1				UR UR
	688–45587–01–40	SHIM (T:0.40MM) CALE (T:0.40MM)	1	1				UR UR
	688–45587–01–50	SHIM (T:0.50MM) CALE (T:0.50MM)	1	1				UR UR
17	67F–44311–00	HOUSING, WATER PUMP CORPS, POMPE A EAU	1	1				
18	93604–10M03	PIN, DOWEL CLAVETTE	2	2				
19	90119–08M87	BOLT, WITH WASHER BOULON, AVEC RONDELLE	2	2				
20	90119–08M13	BOLT, WITH WASHER BOULON, AVEC RONDELLE	2	2				
21	663–44366–00	DAMPER, WATER SEAL JOINT, TUBE D'EAU	1	1				

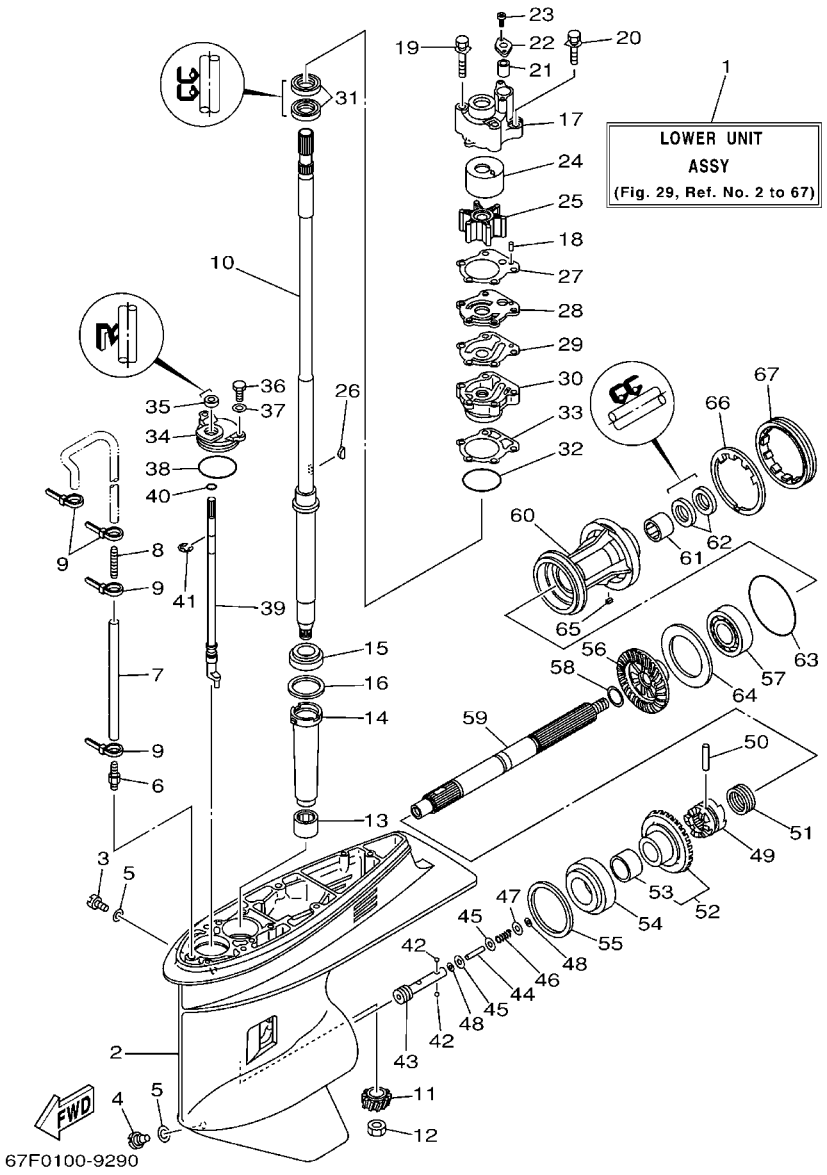

FIG. 29 LOWER CASING & DRIVE 1 BOITIER D'HELICE TRANSMISSION 1

REF. NO.	PART NO. N° PIECES	DESCRIPTION DESCRIPTION	F80	F100				REMARKS REMARQUES
22	90480–19M06	GROMMET PASSE-FIL	1	1				
23	97780–40512	SCREW, TAPPING VIS, TETE BOMBEE	2	2				
24	67F–44322–00	INSERT, CARTRIDGE CUVETTE	1	1				
25	67F–44352–00	IMPELLER TURBINE	1	1				
26	90280–04M04	KEY, WOODRUFF CLAVETTE, DEMI-LUNE	1	1				
27	688–44315–A0	GASKET, WATER PUMP JOINT, POMPE A EAU	1	1				
28	67F–44323–00	OUTER PLATE, CARTRIDGE PLAQUE EXTERIEURE	1	1				
29	688–44324–A0	GASKET, CARTRIDGE JOINT	1	1				
30	688–44341–01–94	HOUSING, WATER PUMP CORPS, POMPE A EAU	1	1				
31	93101–25M03	OIL SEAL JOINT SPY	2	2				
32	93210–46044	O-RING JOINT TORIQUE	1	1				
33	688–44316–A0	GASKET, WATER PUMP JOINT, POMPE A EAU	1	1				
34	688–45321–00	PLATE PLAQUETTE	1	1				
35	93106–09014	OIL SEAL JOINT SPY	1	1				
36	97095–06016	BOLT BOULON	2	2				
37	92995–06600	WASHER RONDELLE	2	2				
38	93210–49046	O-RING JOINT TORIQUE	1	1				
39	67F–44150–00	SHIFT CAM ASSY CAME D'INVERSION	1	1				
40	93210–07003	O-RING JOINT TORIQUE	1	1				
41	99001–08600	CIRCLIP CIRCLIP	1	1				
42	93503–16003	BALL BILLES	2	2				
43	67F–45634–00	SLIDE, SHIFT CONTRE-POUSSOIR	1	1				
44	6H1–45668–00	SHAFT, FREE AXE	1	1				
45	6H1–45635–00	PLUNGER, SHIFT POUSSOIR D'EMBRAYAGE	2	2				
46	90501–12M48	SPRING, COMPRESSION RESSORT, COMPRESSION	1	1				
47	90201–03313	WASHER, PLATE RONDELLE, PLATE	1	1				
48	90183–02M03	NUT, SPRING ECROU, RESSORT	2	2				

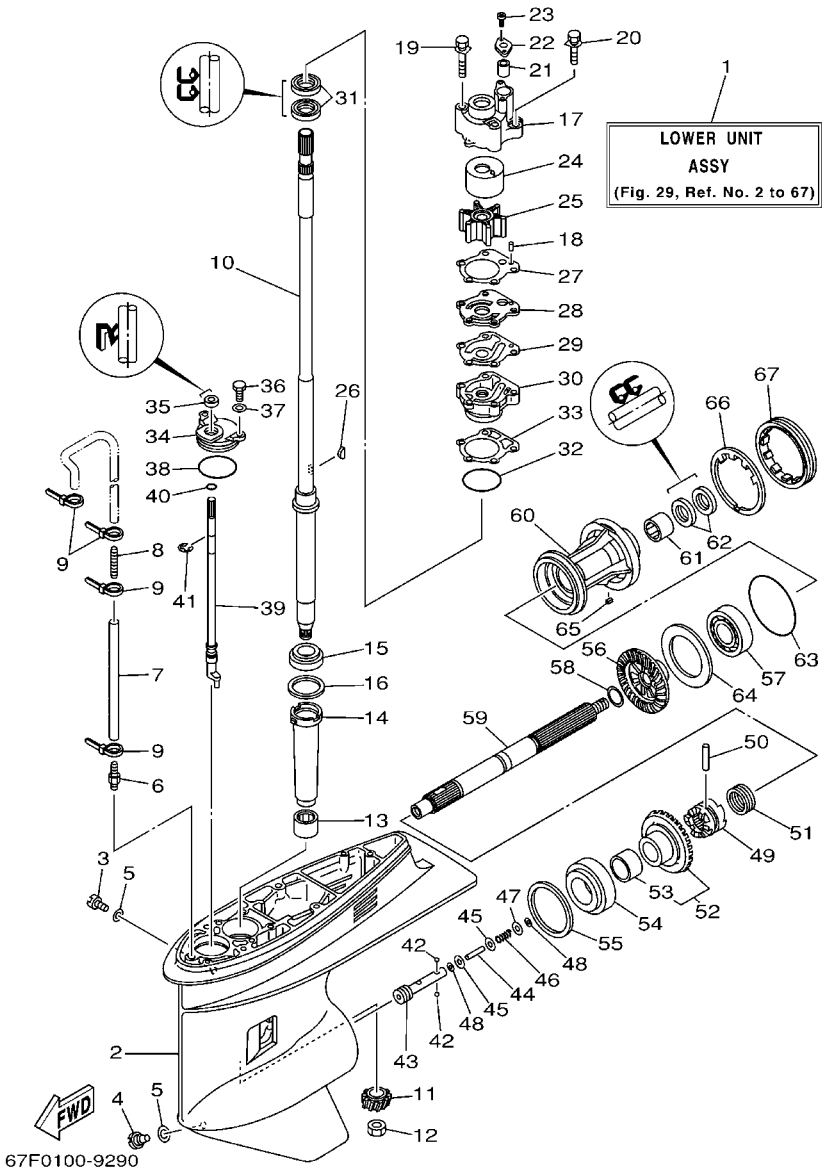

FIG. 29 LOWER CASING & DRIVE 1 BOITIER D'HELICE TRANSMISSION 1

REF. NO.	PART NO. N° PIECES	DESCRIPTION DESCRIPTION	F80	F100				REMARKS REMARQUES
49	67F–45631–00	CLUTCH, DOG CRABOT	1	1				
50	90250–07M02	PIN, STRAIGHT GOUPILLE, DROITE	1	1				
51	688–45633–00	RING, CROSS PIN JONC, GOUPILLE CRABOT	1	1				
52	67F–45560–00	GEAR PIGNON	1	1				
53	93317–322V0	.BEARING .ROULEMENT	1	1				
54	93332–000UD	BEARING ROULEMENT	1	1				
55	688–45567–01–10	SHIM (T:0.10MM) CALE (T:0.10MM)	1	1				UR UR
	688–45567–01–12	SHIM (T:0.12MM) CALE (T:0.12MM)	1	1				UR UR
	688–45567–01–15	SHIM (T:0.15MM) CALE (T:0.15MM)	1	1				UR UR
	688–45567–01–18	SHIM (T:0.18MM) CALE (T:0.18MM)	1	1				UR UR
	688–45567–01–30	SHIM (T:0.30MM) CALE (T:0.30MM)	1	1				UR UR
	688–45567–01–40	SHIM (T:0.40MM) CALE (T:0.40MM)	1	1				UR UR
	688–45567–01–50	SHIM (T:0.50MM) CALE (T:0.50MM)	1	1				UR UR
56	67F–45571–00	GEAR PIGNON	1	1				
57	93306–207U0	BEARING ROULEMENT	1	1				
58	90201–25M05	WASHER, PLATE RONDELLE, PLATE	1	1				
59	67F–45611–01	SHAFT, PROPELLER ARBRE, HELICE	1	1				
60	67F–45331–00–94	HOUSING, BEARING FLASQUE, ROULEMENT	1	1				
61	93317–325U0	BEARING ROULEMENT	1	1				
62	93101–25M03	OIL SEAL JOINT SPY	2	2				
63	93210–86M39	O-RING JOINT TORIQUE	1	1				
64	67F–45576–00	WASHER, THRUST RONDELLE DE CALAGE	1	1				
65	90282–04010	KEY, STRAIGHT CLAVETTE, DROITE	1	1				
66	688–45383–02	WASHER, CLAW FREIN D'ECROU	1	1				
67	688–45384–00	NUT ECROU	1	1				

FIG. 30 LOWER CASING & DRIVE 2 BOITIER D'HELICE TRANSMISSION 2

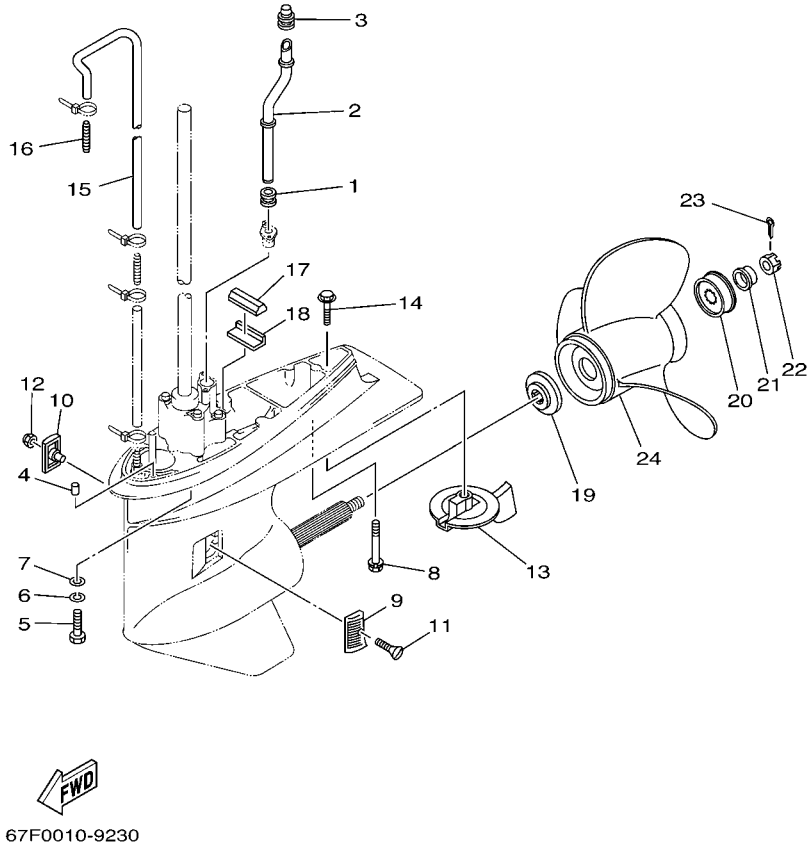

REF. NO.	PART NO. N° PIECES	DESCRIPTION DESCRIPTION	F80	F100				REMARKS REMARQUES
1	663–44367–00	DAMPER, WATER SEAL JOINT TUBE D'EAU	1	1				
2	67F–44361–10	TUBE, WATER TUBE D'EAU	1	1				L L
3	67F–44365–00	DAMPER, WATER SEAL JOINT, TUBE D'EAU	1	1				
4	93606–12019	PIN, DOWEL GOUPILLE	2	2				
5	97075–10040	BOLT BOULON	4	4				L L
6	92995–10100	WASHER RONDELLE	4	4				L L
7	92995–10600	WASHER RONDELLE	4	4				L L
8	90119–08M84	BOLT, WITH WASHER BOULON, AVEC RONDELLE	1	1				L L
9	6H1–45214–00	COVER, WATER INLET GRILLE, ENTREE D'EAU	1	1				
10	6H1–45215–00	COVER, WATER INLET GRILLE, ENTREE D'EAU	1	1				
11	90151–05M00	SCREW, COUNTERSUNK VIS, TETE NOYEE	1	1				
12	90185–05002	NUT, SELF-LOCKING ECROU, AUTO-BLOCANT	1	1				
13	67F–45371–00	TAB-TRIM ANODE DERIVE	1	1				
14	90105–10M67	BOLT, FLANGE BOULON	1	1				
15	90445–07ME0	HOSE (L1220) DURITE (L1220)	1	1				
16	6E5–83558–00	END, NIPPLE RACCORD DE NIPPLE	1	1				
17	688–45375–00	DAMPER, SEAL BOURRELET, CAOUTCHOUC	1	1				
18	663–45376–00–94	GUIDE, SEAL DAMPER BUTEE, JOINT CAOUTCHOUC	1	1				
19	688–45987–01	SPACER ENTRETOISE	1	1				
20	67F–45997–00	SPACER ENTRETOISE	1	1				
21	90389–25M00	BUSH DOUILLE	1	1				
22	90171–16011	NUT, CASTLE ECROU, CRENELE	1	1				
23	91490–40025	PIN, COTTER GOUPILLE	1	1				
24	6E5–45941–00–EL	PROPELLER (3X13"X19"-K) HELICE (3X13"X19"-K)	1	1				UR UR
	6E5–45943–00–EL	PROPELLER (3X12-5/8"X21"-K) HELICE (3X12-5/8"X21"-K)	1	1				UR UR
	6E5–45945–01–EL	PROPELLER (3X13-1/4"X17"-K) HELICE (3X13-1/4"X17"-K)	1	1				UR UR
	6E5–45947–00–EL	PROPELLER (3X13-1/2"X15"-K) HELICE (3X13-1/2"X15"-K)	1	1				UR UR

FIG. 30 LOWER CASING & DRIVE 2 BOITIER D'HELICE TRANSMISSION 2

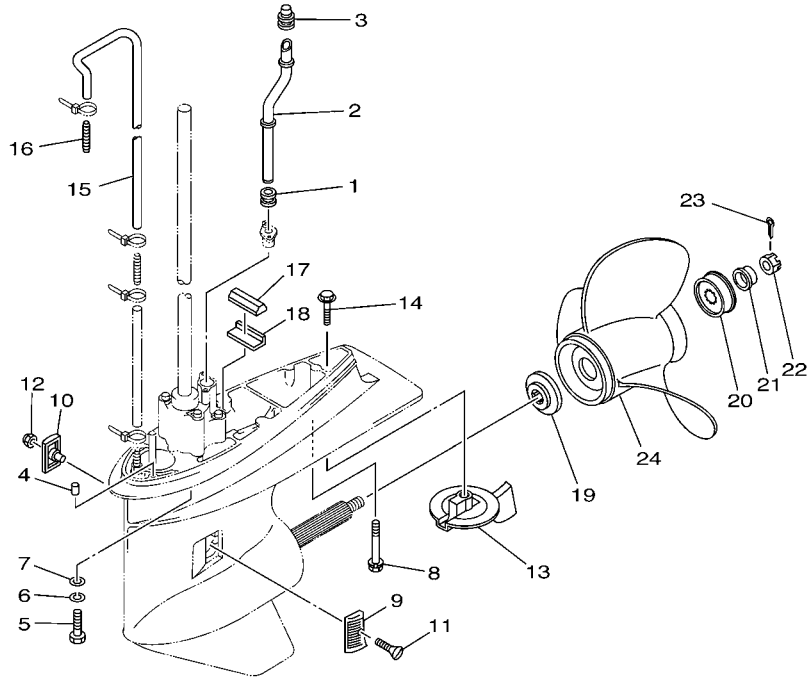

67F0010-9230

REF. NO.	PART NO. N° PIECES	DESCRIPTION DESCRIPTION	F80	F100				REMARKS REMARQUES
24	6E5–45949–00–EL	PROPELLER (3X13-5/8"X13"-K) HELICE (3X13-5/8"X13"-K)	1	1				UR UR
	6E5–45952–00–EL	PROPELLER (3X13"X23"-K) HELICE (3X13"X23"-K)	1	1				UR UR
	6E5–45954–00–EL	PROPELLER (3X14"X11"-K) HELICE (3X14"X11"-K)	1	1				UR UR
	6E5–45956–00–EL	PROPELLER (3X13"X25"-K) HELICE (3X13"X25"-K)	1	1				UR UR
	688–45970–03–98	PROPELLER (3X13"X19"-K) HELICE (3X13"X19"-K)	1	1				UR UR
	688–45972–02–98	PROPELLER (3X13"X21"-K) HELICE (3X13"X21"-K)	1	1				UR UR
	688–45974–02–98	PROPELLER (3X13"X23"-K) HELICE (3X13"X23"-K)	1	1				UR UR
	688–45976–01–98	PROPELLER (3X13"X25"-K) HELICE (3X13"X25"-K)	1	1				UR UR
	688–45978–60–98	PROPELLER (3X13-1/2"X16"-K) HELICE (3X13-1/2"X16"-K)	1	1				UR UR
	688–45930–02–98	PROPELLER (3X13"X17"-K) HELICE (3X13"X17"-K)	1	1				UR UR
	688–45932–60–98	PROPELLER (3X13-1/2"X14"-K) HELICE (3X13-1/2"X14"-K)	1	1				UR UR

FIG. 31 FUEL TANK — RESERVOIR A CARBURANT

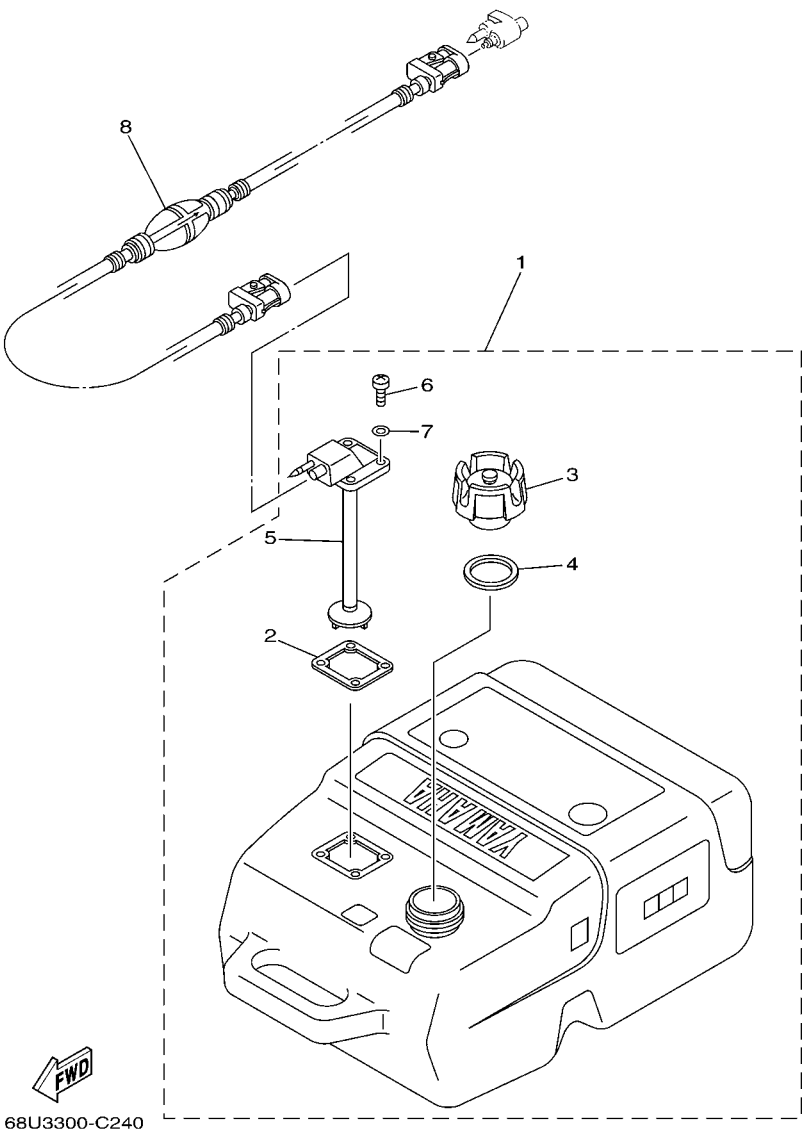

REF. NO.	PART NO. N° PIECES	DESCRIPTION DESCRIPTION	F80	F100				REMARKS REMARQUES
1	6YK–24201–01	FUEL TANK ASSY (25L) RESERVOIR A ESSENCE (ENS.) 25L	1					AP FOR STD AP FOR STD
	6YK–24201–10	FUEL TANK ASSY (25L) RESERVOIR A ESSENCE (ENS.) 25L	1					AP FOR SAV AP FOR SAV
2	6YL–24268–01	.GASKET, FUEL METER .JOINT, JAUGE A CARBURANT	1					
3	6YK–24610–00	.CAP ASSY .BOUCHON	1					WITH INDICATOR WITH INDICATOR
	6YK–24610–10	.CAP ASSY .BOUCHON	1					FOR SAV FOR SAV
4	6YL–24641–00	.GASKET, CAP 1 .JOINT 1, BOUCHON	1					
5	6YK–24260–01	.FUEL METER ASSY .INDICATEUR DE CARBURANT	1					
6	90157–05M16	.SCREW, PAN HEAD .VIS, TETE TRONCONIQUE	4					
7	6YL–24329–00	.SEAL .JOINT	4					
8	6YK–24306–43	FUEL PIPE COMP. 1 DURITE A ESSENCE 1	1					AP AP

FIG. 32 STEERING GUIDE FIXATION DE DIRECTION

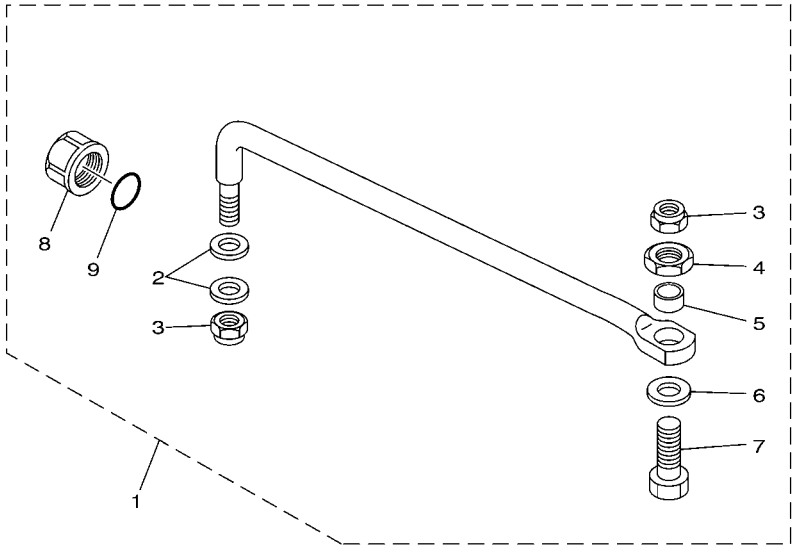

67F0010-9250

REF. NO.	PART NO. N° PIECES	DESCRIPTION DESCRIPTION	F80	F100				REMARKS REMARQUES
1	67F–61350–00	STEERING GUIDE ATTACHMENT KIT FIXATIONS DE DIRECTION	1	1				AP AP
2	90201–10M20	.WASHER, PLATE .RONDELLE, PLATE	2	2				
3	90185–09M01	.NUT, SELF-LOCKING .ECROU, AUTO-BLOCANT	2	2				
4	90170–09M03	.NUT .ECROU	1	1				
5	90387–10M42	.COLLAR .COLLERETTE	1	1				
6	90201–10M63	.WASHER, PLATE .RONDELLE, PLATE	1	1				
7	90101–09M01	.BOLT .BOULON	1	1				
8	6E5–43145–01	.CAP, CLAMP BRACKET .CAPUCHON, PRESSE	1	1				
9	93210–16275	.O-RING .JOINT TORIQUE	1	1				

FIG. 33 REMOTE CONTROL BOX BOITIER DE COMMANDE A DISTANCE

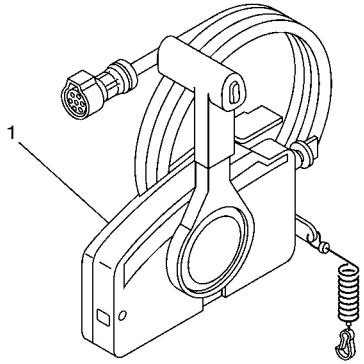

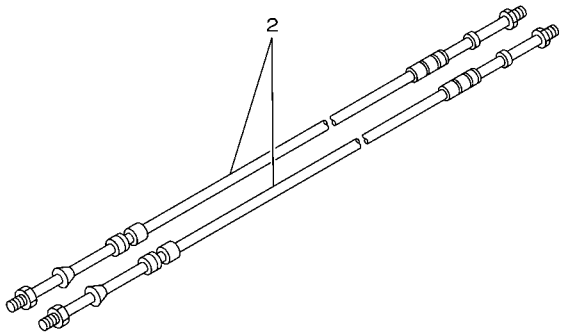

67M0100-8280

REF. NO.	PART NO. N° PIECES	DESCRIPTION DESCRIPTION	F80	F100				REMARKS REMARQUES
1	703–48205–17	REMOTE CONTROL ASSY BOITIER DE COMMANDE A DISTANCE	1	1				AP WITH PT/T SW. AP WITH PT/T SW.
2	701–48320–50	CABLE, REMOTE CONTROL L=15F CABLE, COMMANDE A DISTANCE:15F	2	2				UR UR
	701–48320–60	CABLE, REMOTE CONTROL L=16F CABLE, COMMANDE A DISTANCE:16F	2	2				UR UR
	701–48320–80	CABLE, REMOTE CONTROL L=17F CABLE, COMMANDE A DISTANCE:17F	2	2				UR UR
	701–48320–40	CABLE, REMOTE CONTROL L=19F CABLE, COMMANDE A DISTANCE:19F	2	2				UR UR
	701–48350–00	CABLE, REMOTE CONTROL L=21F CABLE, COMMANDE A DISTANCE:21F	2	2				UR UR

FIG. 34 REMOTE CONTROL ASSY BOITIER DE COMMANDE A DISTANCE

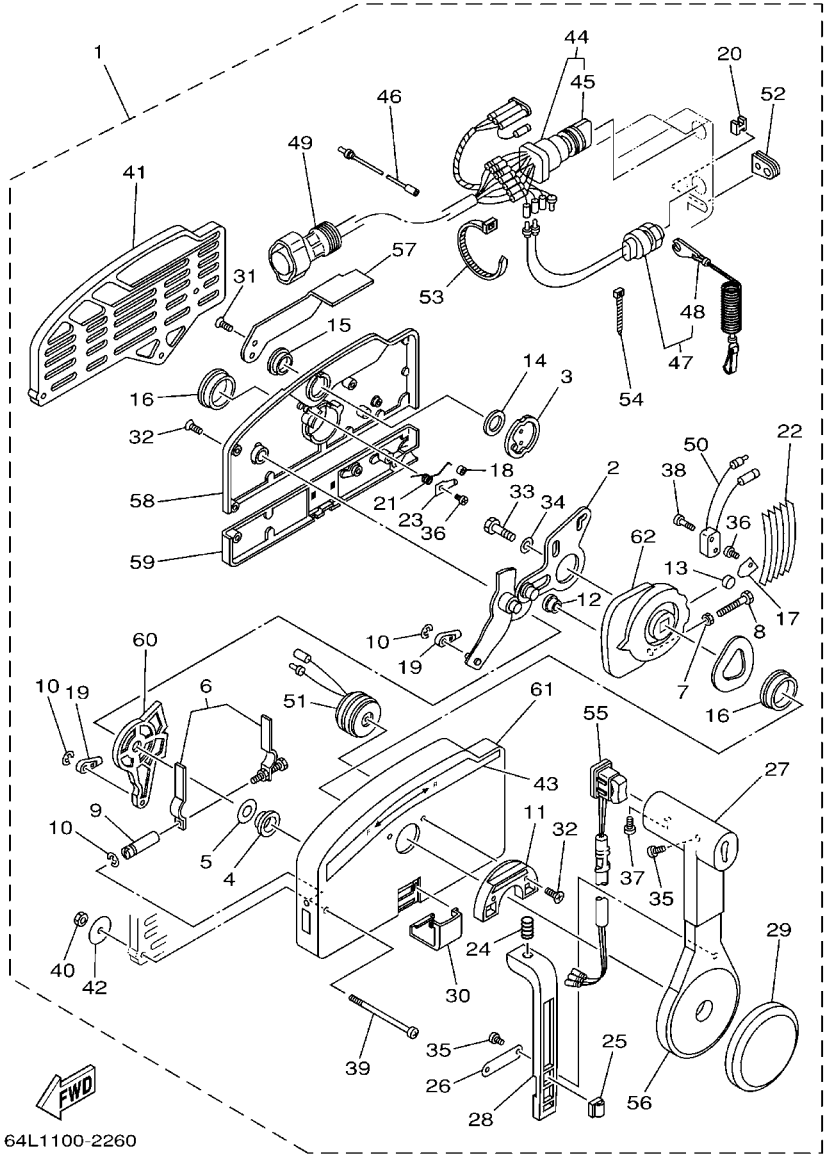

64L1100-2260

REF. NO.	PART NO. N° PIECES	DESCRIPTION DESCRIPTION	F80	F100				REMARKS REMARQUES
1	703–48205–17	REMOTE CONTROL ASSY BOITIER DE COMMANDE A DISTANCE	1	1				AP WITH PT/T SW. AP WITH PT/T SW.
2	703–48261–01	.ARM, THROTTLE .BRAS, ACCELERATION	1	1				
3	703–48153–00	.SHAFT, FREE ACCEL. .AXE	1	1				
4	703–48235–00	.BUSHING .COUSSINET	1	1				
5	703–48268–00	.SPACER .ENTRETOISE	1	1				
6	703–48264–00	.THROTTLE, FRICTION .ACCELERATION	1	1				
7	95380–05600	.NUT .ECROU	1	1				
8	97380–05025	.BOLT .BOULON, HEXAGONAL	1	1				
9	703–48265–00	.SHAFT, FRICTION .AXE, COPILOTE	1	1				
10	93430–06024	.CIRCLIP .CLIPS	3	3				
11	703–48245–00	.PLATE, LOCK .PLAQUE, VERROU	1	1				
12	703–48252–00	.ROLLER, CAM .POULIE	1	1				
13	701–48248–00	.ROLLER, FREE ACCEL. .POULIE	1	1				
14	703–48198–00	.WASHER, WAVE .RONDELLE, ELASTIQUE ONDULEE	1	1				
15	703–48243–00	.BUSHING .COUSSINET	1	1				
16	703–48236–00	.BUSHING 1 .POULIE	2	2				
17	703–48189–00	.RETAINER .FLASQUE	1	1				
18	703–48234–00	.ROLLER, DETENT .POULIE	1	1				
19	703–48345–01	.CABLE END, REMOTE CONTROL 2 .CHAPE CABLE	2	2				
20	703–48358–00	.ANCHOR, CABLE .COLLIER	1	1				
21	703–48244–00	.SPRING, FREE ACCEL. .RESSORT	1	1				
22	703–48238–00	.SPRING, DETENT .RESSORT	5	5				
23	703–48246–00	.SPACER .ENTRETOISE	1	1				
24	703–48227–00	.SPRING, NEUTRAL LOCK .RESSORT	1	1				
25	703–82594–00	.CLAMP .BRIDE	1	1				WITH PT/T SW. WITH PT/T SW.
26	703–48226–00	.PLATE, STOPPER .PLAQUETTE	1	1				
27	703–48222–00	.GRIP, CONTROL LEVER .POIGNEE, COMMANDE LEVIER	1	1				SINGLE SINGLE

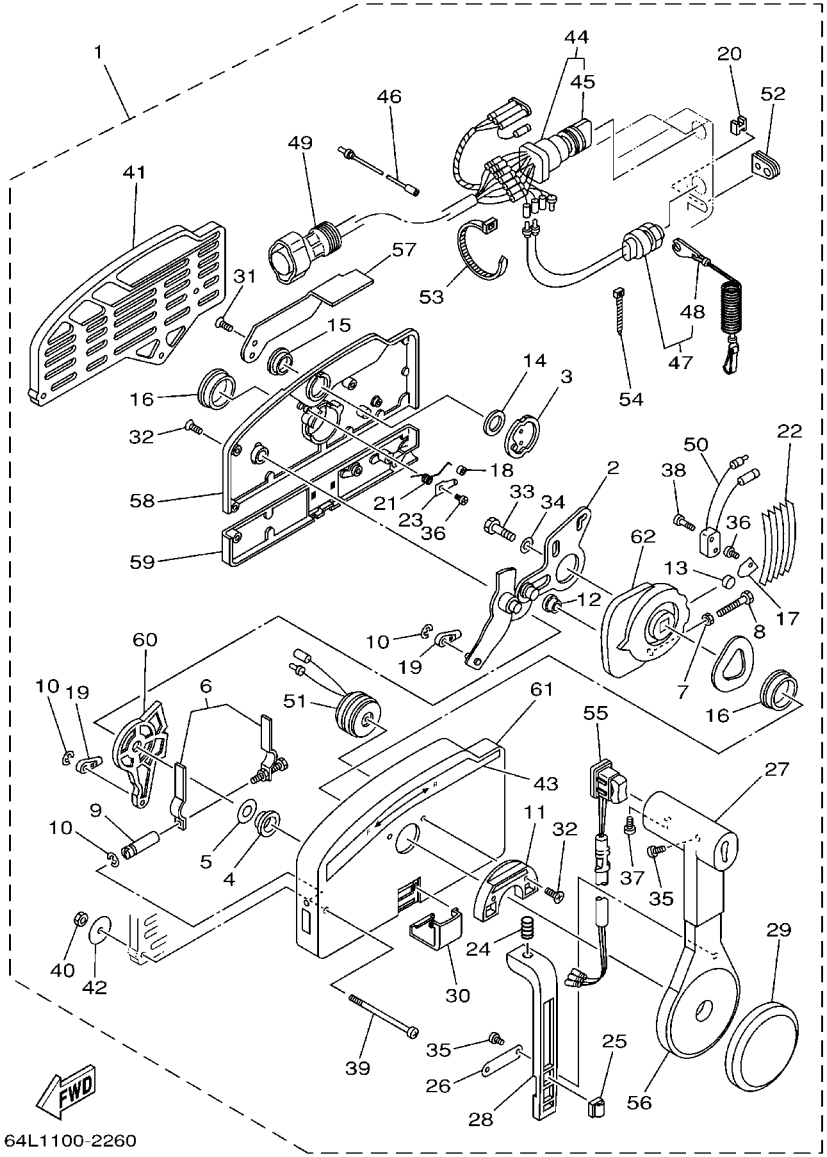

64L1100-2260

FIG. 34 REMOTE CONTROL ASSY — BOITIER DE COMMANDE A DISTANCE

REF. NO.	PART NO. N° PIECES	DESCRIPTION DESCRIPTION	F80	F100				REMARKS REMARQUES
28	703–48223–00	.LOCK, NEUTRAL .VERROU, NEUTRAL	1	1				
29	703–48225–00	.COVER .COUVERCLE	1	1				
30	703–48219–00	.COVER, LEAD .COUVERCLE	1	1				
31	703–48281–00	.SCREW .VIS	2	2				
32	703–48282–00	.SCREW .VIS	7	7				
33	97380–08030	.BOLT .BOULON, HEXAGONAL	1	1				
34	92990–08600	.WASHER, PLATE .RONDELLE, PLATE	1	1				
35	98580–04010	.SCREW, PAN HEAD .VIS	3	3				
36	98580–04006	.SCREW, PAN HEAD .VIS	2	2				
37	98580–05010	.SCREW, PAN HEAD .VIS	1	1				
38	98580–03015	.SCREW, PAN HEAD .VIS	2	2				
39	703–48291–10	.SCREW (M6) .VIS (M6)	3	3				
40	95380–06600	.NUT, HEXAGON .ECROU	3	3				
41	703–48293–10	.SPACER, REMOTE CONTROL .ENTRETOISE	1	1				SINGLE SINGLE
42	701–48287–00	.WASHER .RONDELLE	3	3				
43	703–48215–00	.GRAPHIC .ADHESIF	1	1				
44	703–82510–43	.MAIN SWITCH ASSY .CONTACTEUR A CLEF COMPLET	1	1				
45	703–82577–00	..CAP, KEY ..CABOCHON	1	1				
46	703–82531–00	.WIRE, LEAD .FIL	1	1				
47	688–82575–01	.ENGINE STOP SWITCH ASSY .COUPE CIRCUIT CPLT	1	1				
48	682–82556–00	..STOPPER ..PLAQUETTE	1	1				
49	688–8258A–20	.EXTENSION, WIRE HARNESS .EXTENSION, FAISCEAU DE FILS	1	1				L:5M (10P) L:5M (10P)
50	703–82540–00	.NEUTRAL SWITCH ASSY .CONTACTEUR DE POINT-MORT	1	1				
51	703–83383–02	.BUZZER .RONFLEUR	1	1				
52	703–48284–00	.GROMMET .PASSE-FIL	1	1				
53	703–82591–00	.BAND .COLLIER	1	1				
54	703–82592–00	.BAND .COLLIER	1	1				

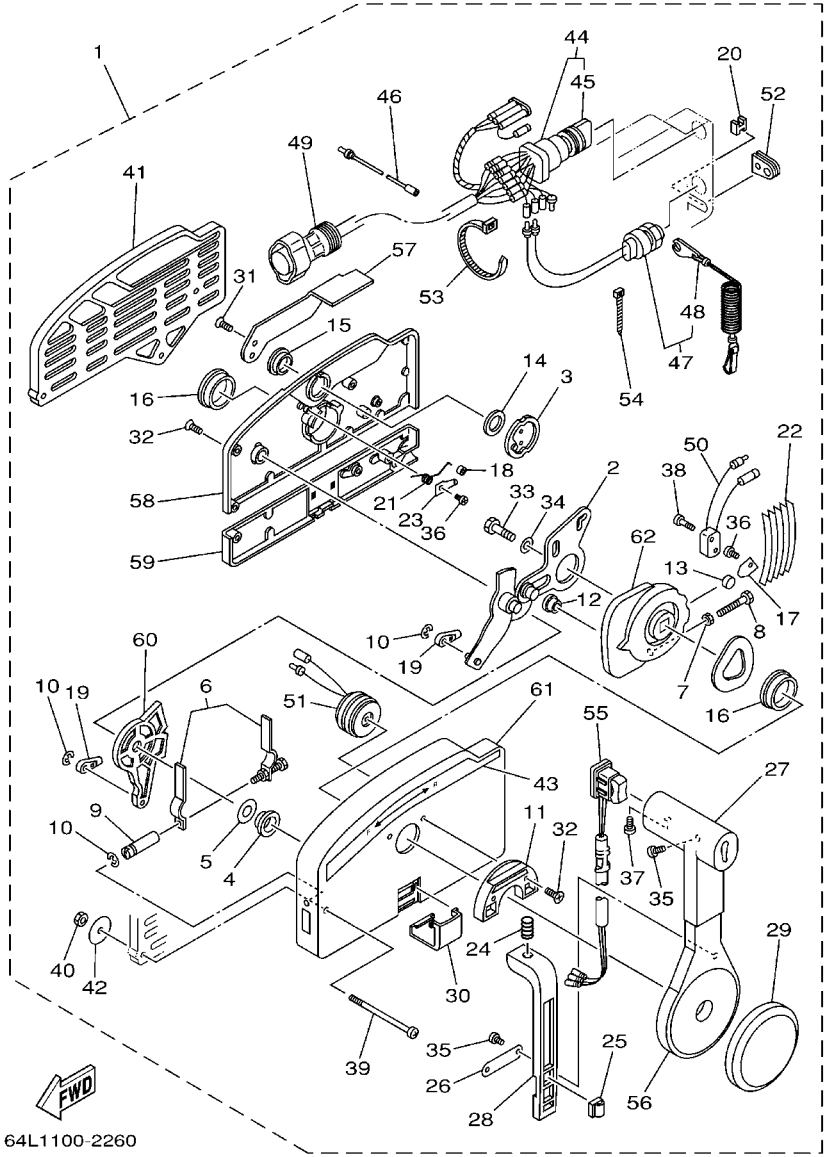

64L1100-2260

FIG. 34 REMOTE CONTROL ASSY — BOITIER DE COMMANDE A DISTANCE

REF. NO.	PART NO. N° PIECES	DESCRIPTION DESCRIPTION	F80	F100				REMARKS REMARQUES
55	703–82563–02	.TRIM & TILT SWITCH ASSY .INCLINER ET PARER COMMUTATEUR	1	1				WITH PT/T SW. WITH PT/T SW.
56	703–48221–00	.LEVER, CONTROL .LEVIER, COMMANDE	1	1				
57	703–48152–00	.KNOB, FREE ACCEL. .BOUTON	1	1				
58	703–48212–00	.BACK PLATE 1 .PLAQUETTE 1	1	1				
59	703–48213–00	.BACK PLATE 2 .PLAQUETTE 2	1	1				
60	703–48271–00	.ARM, SHIFT .BRAS	1	1				
61	703–48211–01	.HOUSING,1 .CORPS	1	1				
62	703–48232–00	.GEAR .PIGNON	1	1				

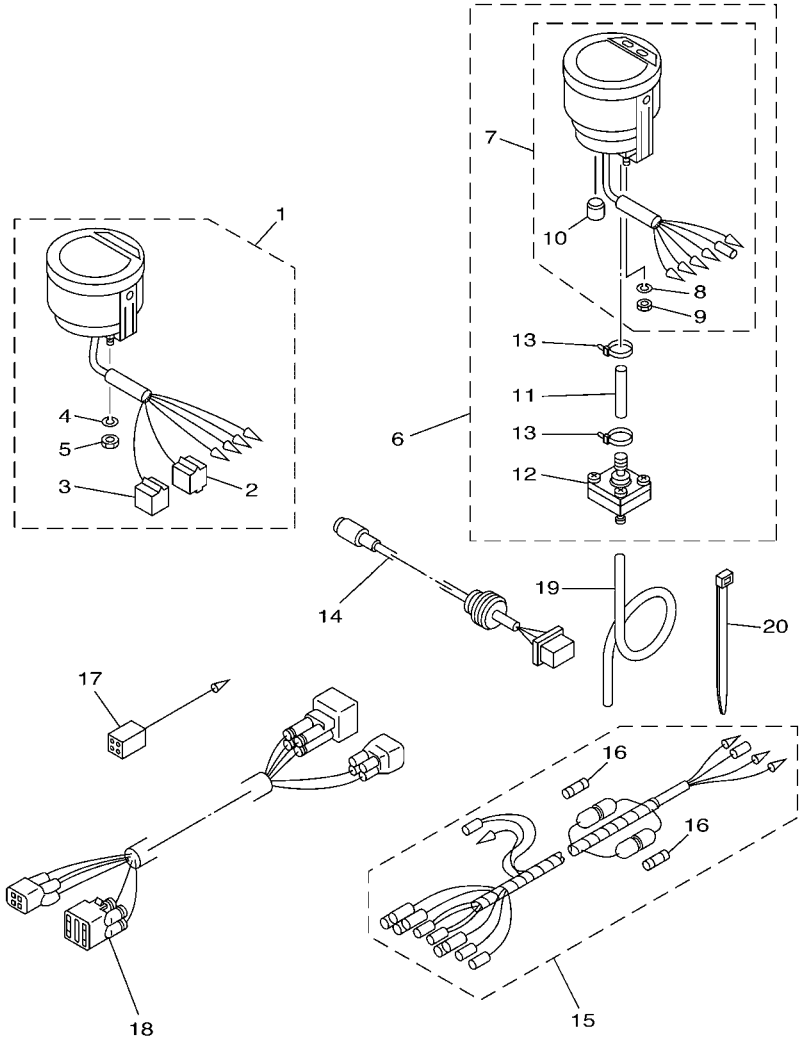

61A1700-2290

FIG. 35 METER COMPTEUR

REF. NO.	PART NO. N° PIECES	DESCRIPTION DESCRIPTION	F80	F100				REMARKS REMARQUES
1	6Y5–8350T–03	TACHOMETER ASSY COMPTE-TOURS CPLT	1	1				AP AP
2	9E450–04433	.CONNECTOR .CONNECTEUR	1	1				M-4-W M-4-W
3	9E450–04533	.CONNECTOR .CONNECTEUR	1	1				F-4-W F-4-W
4	92990–04100	.WASHER, SPRING .RONDELLE, GROWER	2	2				
5	95380–04600	.NUT .ECROU	2	2				
6	6Y5–83500–S5	DIGITAL SPEEDOMETER ASSY TACHYMETRE NUMERIQUE CPLT.	1	1				AP AP
7	6Y5–83570–S5	.SPEEDOMETER ASSY .COMPTEUR DE VITESSE CPLT	1	1				
8	92990–04100	..WASHER, SPRING ..RONDELLE, GROWER	2	2				
9	95380–04600	..NUT ..ECROU	2	2				
10	6Y5–83533–T2	..GROMMET ..RONDELLE CAOUTCHOUC	1	1				
11	6Y5–83557–31	.TUBE .TUBE	1	1				
12	6Y5–83728–00	.CONNECTOR ASSY .CONNEXION COMPLET	1	1				
13	90465–11M10	.CLAMP .BRIDE	2	2				
14	6Y5–87122–S0	CORD ASSY 1 COPDON COMPLET	1	1				AP AP
15	6Y5–83553–M0	WIRE, LEAD FIL	1	1				AP AP
16	1E6–82151–00	.FUSE (10A) .FUSIBLE (10A)	2	2				
17	6Y5–82117–00	WIRE, LEAD (BLACK) FIL (NOIR)	1	1				AP AP
18	68F–82553–80	EXTENSION, WIRE LEAD EXTENSION, FAISCEAU	1	1				AP AP
19	6Y5–83557–10	TUBE (8M) TUBE (8M)	1	1				AP AP
20	90465–11M10	CLAMP BRIDE	2	2				AP AP

FIG. 36 REPAIR KIT 1 — KITS DE REPARATION 1

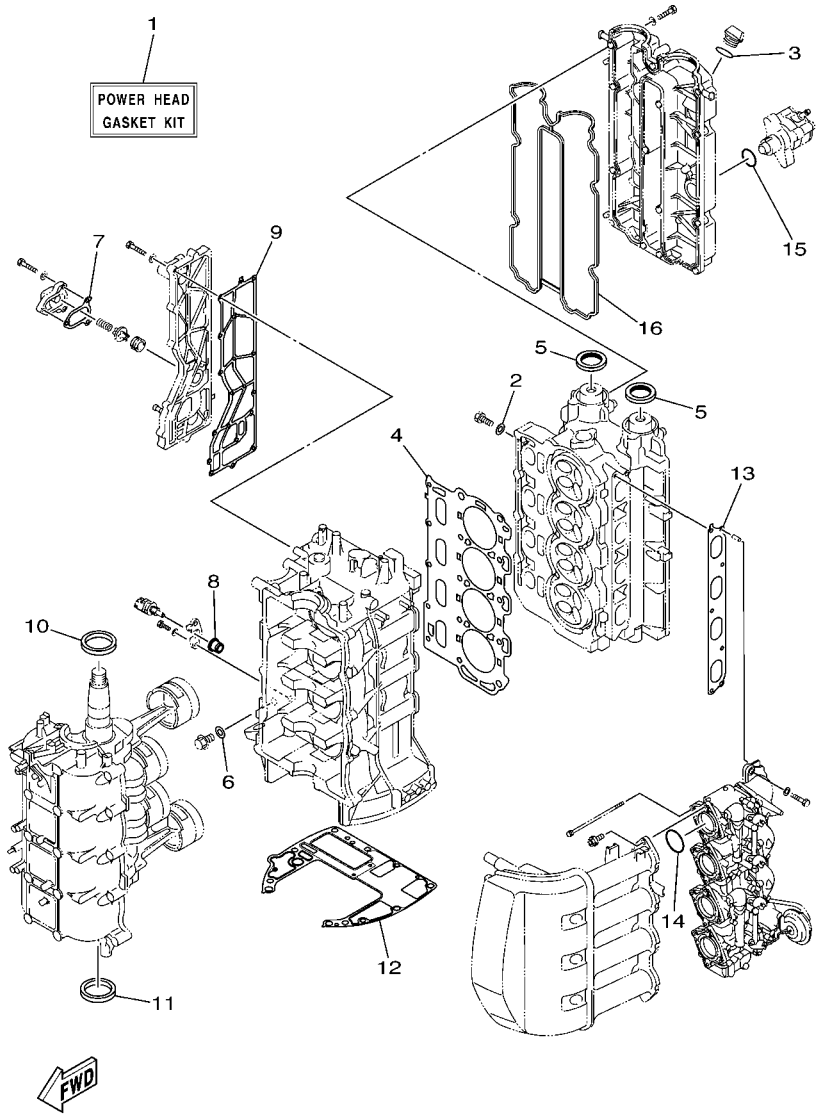

REF. NO.	PART NO. N° PIECES	DESCRIPTION DESCRIPTION	F80	F100				REMARKS REMARQUES
1	67F–W0001–02	POWER HEAD GASKET KIT POCHETTE DE JINTS TETE MOTRICE	1	1				
2	90430–08143	.GASKET .JOINT	4	4				
3	93210–24M79	.O-RING .JOINT TORIQUE	1	1				
4	67F–11181–02	.GASKET, CYLINDER HEAD 1 .JOINT, DE CULASSE 1	1	1				
5	93102–38M59	.OIL SEAL .JOINT SPY	2	2				
6	90430–14115	.GASKET .JOINT	1	1				
7	67F–12435–A0	.GASKET .JOINT	1	1				
8	68V–85753–00	.GASKET, SENDER UNIT .JOINT, DE PERCEPTION	1	1				
9	67F–41114–A0	.GASKET, EXHAUST OUTER COVER .JOINT, COUVERCLE D'ECHAPPEMEN	1	1				
10	93102–48009	.OIL SEAL .JOINT SPY	1	1				
11	93101–48002	.OIL SEAL .JOINT SPY	1	1				
12	68V–11351–00	.GASKET, CYLINDER .JOINT, D'EMBASE	1	1				
13	67F–13645–00	.GASKET, MANIFOLD 1 .JOINT, TUBULURE 1	1	1				
14	93210–41MJ2	.O-RING .JOINT TORIQUE	4	4				
15	93210–30682	.O-RING .JOINT TORIQUE	1	1				
16	67F–11356–00	.SEAL, CYLINDER 2 .JOINT, SPY CYLINDRE	1	1				

FIG. 37 REPAIR KIT 2 — KITS DE REPARATION 2

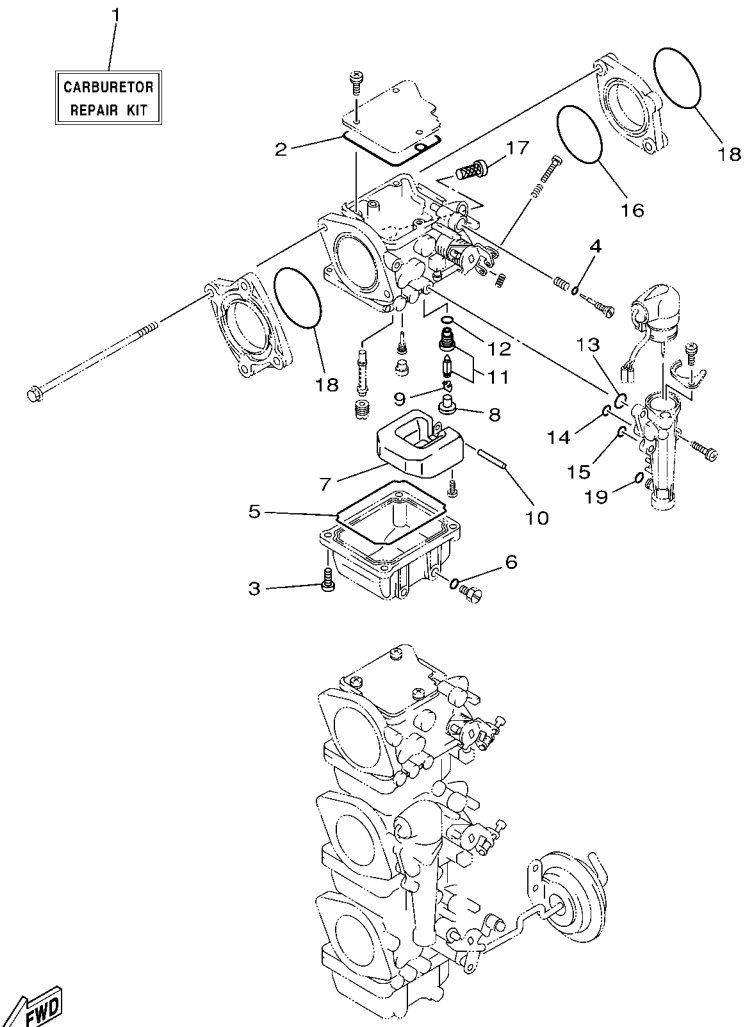

67F0100-9380

REF. NO.	PART NO. N° PIECES	DESCRIPTION DESCRIPTION	F80	F100				REMARKS REMARQUES
1	67F–W0093–01	CARBURETOR REPAIR KIT KIT DE REPARATION CARBURATEUR	1	1				
2	67F–14147–00	.O-RING .JOINT TORIQUE	1	1				
3	97980–04114	.SCREW, WITH WASHER .VIS, AVEC RONDELLE	4	4				
4	67F–14397–00	.O-RING .JOINT TORIQUE	1	1				
5	67F–14984–00	.GASKET, FLOAT CHAMBER .JOINT, CUVE DE FLOTTEUR	1	1				
6	93210–04230	.O-RING .JOINT TORIQUE	1	1				
7	6H4–14985–01	.FLOAT .FLOTTEUR	1	1				
8	676–14186–00	.PIN, FLOAT .AXE, FLOTTEUR	1	1				
9	67F–14159–00	.CLIP .JONC	1	1				
10	6H4–14548–00	.PIN, FLOAT ARM .AXE, BRAS DE FLOTTEUR	1	1				
11	60C–14590–01	.NEEDLE VALVE ASSY .POINTEAU	1	1				
12	93210–04228	.O-RING .JOINT TORIQUE	1	1				
13	67F–14398–00	.O-RING .JOINT TORIQUE	1	1				
14	67F–14398–10	.O-RING .JOINT TORIQUE	1	1				
15	67F–14398–20	.O-RING .JOINT TORIQUE	1	1				
16	67F–14239–00	.SEAL .JOINT	1	1				
17	67F–14371–01	.ELEMENT, FILTER .ELEMENT, FILTRE	1	1				
18	93210–40M10	.O-RING .JOINT TORIQUE	2	2				
19	67F–14398–30	.O-RING .JOINT TORIQUE	1	1				

FIG. 38 REPAIR KIT 3 KITS DE PEPARATION 3

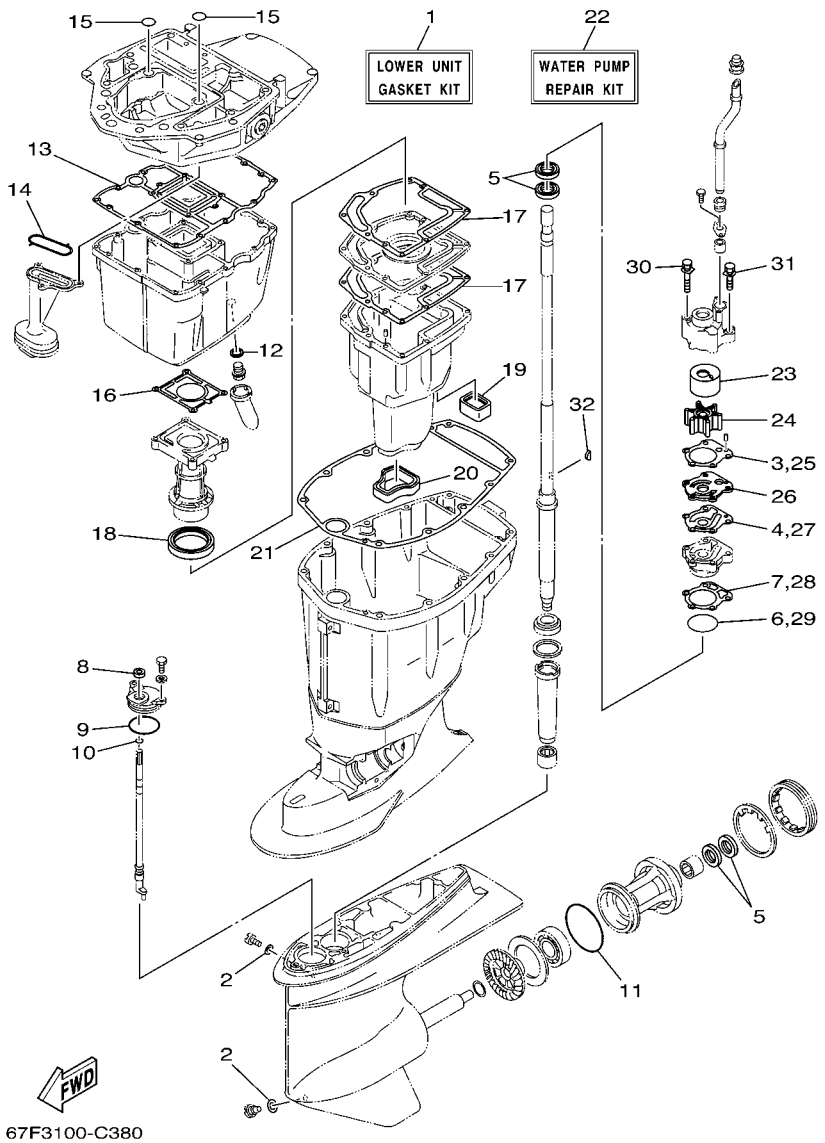

REF. NO.	PART NO. N° PIECES	DESCRIPTION DESCRIPTION	F80	F100				REMARKS REMARQUES
1	67F–W0001–21	LOWER UNIT GASKET KIT POCHETTE DE JOINTS EMBASE	1	1				
2	90430–08020	.GASKET .JOINT	2	2				
3	688–44315–A0	.GASKET, WATER PUMP .JOINT, POMPE A EAU	1	1				
4	688–44324–A0	.GASKET, CARTRIDGE .JOINT	1	1				
5	93101–25M03	.OIL SEAL .JOINT SPY	4	4				
6	93210–46044	.O-RING .JOINT TORIQUE	1	1				
7	688–44316–A0	.GASKET, WATER PUMP .JOINT, POMPE A EAU	1	1				
8	93106–09014	.OIL SEAL .JOINT SPY	1	1				
9	93210–49046	.O-RING .JOINT TORIQUE	1	1				
10	93210–07003	.O-RING .JOINT TORIQUE	1	1				
11	93210–86M39	.O-RING .JOINT TORIQUE	1	1				
12	90430–14M09	.GASKET .JOINT	1	1				
13	68V–15312–00	.GASKET, OIL PAN .JOINT DE VENTILATEUR D'HUILE	1	1				
14	67F–13415–00	.SEAL, OIL STRAINER .JOINT, FILTRE A HUILE	1	1				
15	93210–19MJ1	.O-RING .JOINT TORIQUE	2	2				
16	67F–41133–A1	.GASKET, EXHAUST MANIFOLD 1 .JOINT, PIPE D'ECHAPPEMENT	1	1				
17	67F–41134–A0	.GASKET, EXHAUST MANIFOLD .JOINT, PIPE D'ECHAPPEMENT	2	2				
18	67F–41138–00	.SEAL, EXT. 1 .JOINT DE GROUPE 1	1	1				
19	67F–45127–00	.SEAL .JOINT	1	1				
20	67F–45123–00	.GASKET, MUFFLER .JOINT, POT DE DETENTE	1	1				
21	67F–45113–00	.GASKET, UPPER CASING .JOINT, TUBE D'ARBRE	1	1				
22	67F–W0078–00	WATER PUMP REPAIR KIT KIT DE REPARATION DE LA POMPE	1	1				
23	67F–44322–00	.INSERT, CARTRIDGE .CUVETTE	1	1				
24	67F–44352–00	.IMPELLER .TURBINE	1	1				
25	688–44315–A0	.GASKET, WATER PUMP .JOINT, POMPE A EAU	1	1				
26	67F–44323–00	.OUTER PLATE, CARTRIDGE .PLAQUE EXTERIEURE	1	1				
27	688–44324–A0	.GASKET, CARTRIDGE .JOINT	1	1				

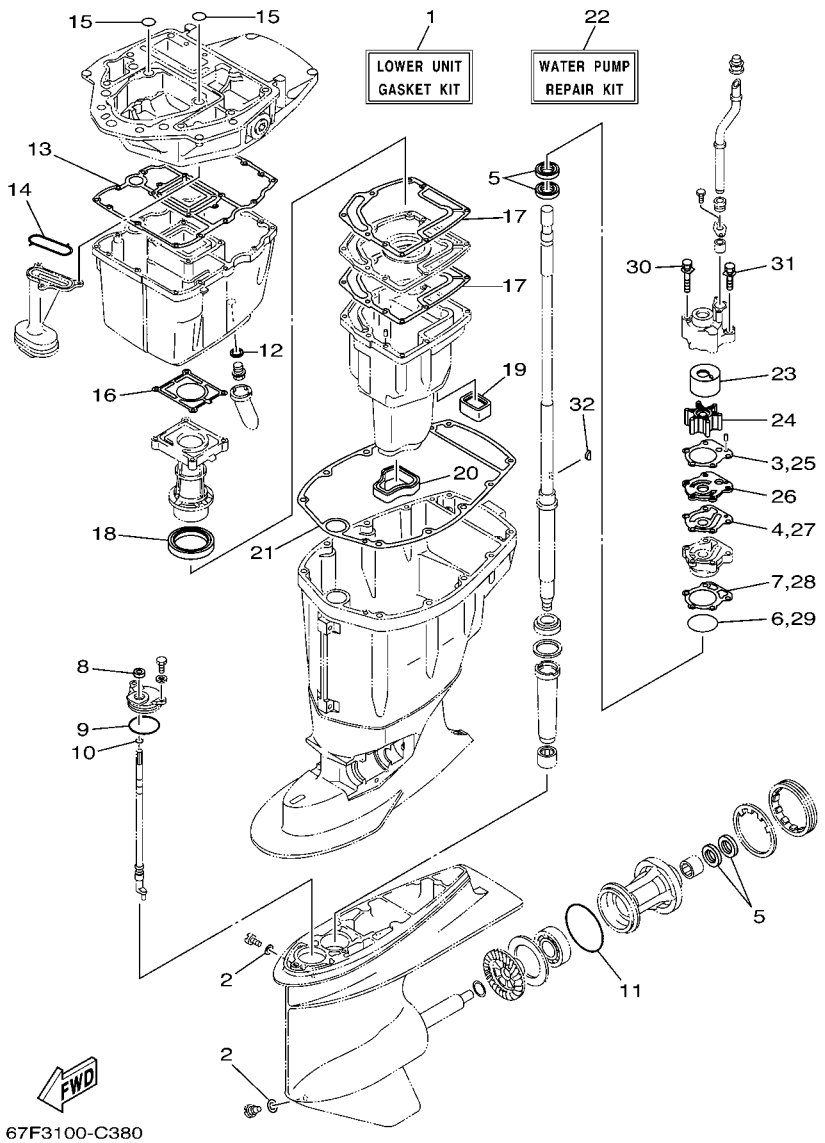

FIG. 38 REPAIR KIT 3 — KITS DE PEPARATION 3

REF. NO.	PART NO. N° PIECES	DESCRIPTION DESCRIPTION	F80	F100				REMARKS REMARQUES
28	688–44316–A0	.GASKET, WATER PUMP .JOINT, POMPE A EAU	1	1				
29	93210–46044	.O-RING .JOINT TORIQUE	1	1				
30	90119–08M87	.BOLT, WITH WASHER .BOULON, AVEC RONDELLE	2	2				
31	90119–08M13	.BOLT, WITH WASHER .BOULON, AVEC RONDELLE	2	2				
32	90280–04M04	.KEY, WOODRUFF .CLAVETTE, DEMI-LUNE	1	1				

NUMERICAL INDEX
INDEX NUMERIQUE

PART NO. N° PIECES	REF. NO.
67F–11110–11–94	4 – 2
62Y–11119–00	2 – 8
67F–11133–10	4 – 3
67F–11168–00	4 – 22
67F–11181–02	4 – 17
	36 – 4
68V–11191–00–1S	4 – 21
67F–11192–00	4 – 29
68V–11325–00	2 – 24
	4 – 8
67F–11327–00–94	2 – 25
	4 – 9
67F–11328–00	2 – 28
	4 – 12
68V–11351–00	2 – 34
	36 – 12
67F–11356–00	4 – 26
	36 – 16
67F–11411–00	3 – 1
67F–11416–00	3 – 4
67F–11416–10	3 – 4
67F–11416–20	3 – 4
67F–11417–00	3 – 5
67F–11417–10	3 – 5
67F–11417–20	3 – 5
67F–11417–30	3 – 5
67F–11418–00	3 – 6
67F–11418–10	3 – 6
67F–11418–20	3 – 6
67F–11536–00	5 – 23
67F–11537–00	5 – 14
67F–11590–00	5 – 18
67F–11595–00	5 – 21
67F–11603–01	3 – 9
67F–11604–01	3 – 9
67F–11640–00	3 – 7
67F–11640–10	3 – 7
67F–11654–00	3 – 8
67F–11656–00	3 – 10
67F–11656–10	3 – 10
67F–11656–20	3 – 10
67F–11656–30	3 – 10
68V–12111–00	5 – 1
67F–12114–00	5 – 4
67F–12116–00	5 – 3
67F–12117–00	5 – 5
67F–12118–00	5 – 6
68V–12121–00	5 – 2

PART NO. N° PIECES	REF. NO.
67F–12138–60	12 – 24
67F–12153–00	5 – 9
67F–12168–00	5 – 10
67F–12168–10	5 – 10
67F–12168–20	5 – 10
67F–12168–30	5 – 10
67F–12168–40	5 – 10
67F–12168–50	5 – 10
67F–12168–60	5 – 10
67F–12168–70	5 – 10
67F–12168–80	5 – 10
67F–12168–A0	5 – 10
67F–12168–B0	5 – 10
67F–12168–C0	5 – 10
67F–12168–D0	5 – 10
67F–12168–E0	5 – 10
67F–12168–F0	5 – 10
67F–12168–G0	5 – 10
67F–12168–H0	5 – 10
67F–12168–J0	5 – 10
67F–12168–K0	5 – 10
67F–12168–L0	5 – 10
67F–12168–M0	5 – 10
67F–12168–N0	5 – 10
67F–12168–P0	5 – 10
67F–12168–R0	5 – 10
67F–12168–S0	5 – 10
67F–12168–T0	5 – 10
67F–12168–U0	5 – 10
67F–12168–V0	5 – 10
67F–12168–W0	5 – 10
67F–12168–X0	5 – 10
67F–12168–Y0	5 – 10
67F–12169–00	5 – 10
67F–12169–10	5 – 10
67F–12169–20	5 – 10
67F–12169–30	5 – 10
67F–12169–40	5 – 10
67F–12169–50	5 – 10
67F–12169–60	5 – 10
67F–12169–70	5 – 10
67F–12169–80	5 – 10
67F–12169–A0	5 – 10
67F–12169–B0	5 – 10
67F–12169–C0	5 – 10
67F–12169–D0	5 – 10
67F–12169–E0	5 – 10
67F–12169–F0	5 – 10

PART NO. N° PIECES	REF. NO.
67F–12169–G0	5 – 10
67F–12169–H0	5 – 10
67F–12169–J0	5 – 10
67F–12169–K0	5 – 10
67F–12169–L0	5 – 10
67F–12169–M0	5 – 10
67F–12169–N0	5 – 10
67F–12171–00	5 – 11
67F–12181–00	5 – 12
67F–12411–00	4 – 31
68V–12413–00–1S	4 – 32
6G5–12416–00	2 – 18
67F–12435–A0	2 – 22
	36 – 7
67F–1243A–00	2 – 31
67F–1246A–00–1S	2 – 21
67F–12535–00	17 – 31
68T–12572–00	17 – 30
6R3–12581–00	17 – 34
6R3–12582–00	17 – 35
6R3–12583–00	17 – 36
67F–13119–01	28 – 19
68V–13131–00	10 – 19
67F–13149–00	28 – 23
67F–13183–00	8 – 2
67F–13300–10	28 – 14
67F–13314–02	28 – 15
67F–13329–00	28 – 17
67F–13338–00	28 – 25
67F–13339–00	28 – 24
67F–13411–00	28 – 9
67F–13415–00	28 – 13
	38 – 14
67F–13434–02	1 – 20
68V–13437–60	12 – 25
5GH–13440–00	2 – 39
67F–13473–01	28 – 16
67F–13495–00	28 – 18
67F–13631–03	28 – 22
67F–13641–00–94	6 – 6
67F–13645–00	6 – 12
	36 – 13
67F–13769–00	28 – 20
67F–13914–00	28 – 21
67F–1412A–00	8 – 1
	9 – 1
67F–14146–00	7 – 7
67F–14147–00	7 – 8

PART NO. N° PIECES	REF. NO.
67F–14147–00	37 – 2
67F–14159–00	7 – 30
	37 – 9
67F–14178–00	7 – 37
676–14186–00	7 – 29
	37 – 8
67F–14189–00	8 – 11
67F–14216–00	6 – 2
67F–14239–00	6 – 3
	37 – 16
67F–14243–00	6 – 1
67F–14255–00	7 – 47
67F–14271–00	6 – 4
60C–14294–00	8 – 15
	9 – 7
60C–14298–00	8 – 16
	9 – 8
67F–14325–00	7 – 44
67F–14348–00	9 – 9
67F–14349–00	8 – 3
	9 – 3
67F–14349–10	8 – 4
67F–14349–20	8 – 5
	9 – 2
67F–14349–30	8 – 6
67F–14349–40	8 – 7
67F–14349–50	8 – 8
67F–14349–60	8 – 9
67F–14349–70	8 – 12
67F–14369–00	7 – 43
67F–14371–01	7 – 45
	37 – 17
67F–14378–00	7 – 35
67F–14380–01	7 – 36
67F–14397–00	7 – 21
	37 – 4
67F–14398–00	7 – 39
	37 – 13
67F–14398–10	7 – 41
	37 – 14
67F–14398–20	7 – 42
	37 – 15
67F–14398–30	7 – 46
	37 – 19
67F–14440–00	6 – 19
63V–14523–00	7 – 18
6H4–14548–00	7 – 31
	37 – 10

PART NO. N° PIECES	REF. NO.
67F–14555–00	7 – 16
697–14555–00	7 – 6
67F–14556–00	7 – 17
67F–14565–00	7 – 40
67F–14567–00	7 – 15
6K7–14573–00	15 – 17
6H2–14578–00	7 – 22
67F–14585–00	8 – 10
	9 – 4
60C–14590–01	7 – 33
	37 – 11
67F–14592–00	7 – 38
67F–14711–00–5B	27 – 11
67F–14860–00	7 – 49
67F–14901–20	7 – 1
67G–14901–30	7 – 1
67G–14901–50	7 – 1
67F–14902–20	7 – 2
67G–14902–30	7 – 2
67G–14902–50	7 – 2
67F–14903–20	7 – 3
67F–14904–20	7 – 4
67G–14904–30	7 – 4
67G–14904–50	7 – 4
67F–14923–00	7 – 5
67F–14923–10	7 – 5
67G–14943–29	7 – 14
67F–14943–32	7 – 14
67G–14943–80	7 – 14
67G–14947–00	7 – 13
67F–14947–10	7 – 13
67G–14948–05	7 – 12
67F–1494F–04	7 – 12
676–14966–00	7 – 10
67F–14980–00	7 – 23
67F–14980–10	7 – 24
67F–14984–00	7 – 25
	37 – 5
6H4–14985–01	7 – 28
	37 – 7
6H3–14992–00	7 – 26
67F–14998–00	7 – 20
67F–15100–03–1S	2 – 2
67F–15142–00	2 – 12
67F–15311–01–5B	28 – 1
68V–15312–00	28 – 8
	38 – 13
67F–15316–00	28 – 2

PART NO. N° PIECES	REF. NO.
68V–15362–10	28 – 30
6G8–15363–00	4 – 35
67F–15373–00	6 – 13
1UF–22434–00	25 – 41
67F–22435–00	25 – 22
67F–22471–01	25 – 36
68V–24149–00	10 – 26
6G8–2415E–00	17 – 51
6YK–24201–01	31 – 1
6YK–24201–10	31 – 1
6YK–24260–01	31 – 5
6YL–24268–01	31 – 2
6YK–24306–43	11 – 1
	31 – 8
67F–24312–00	17 – 37
6YL–24329–00	31 – 7
68F–24356–00	8 – 14
	9 – 5
63D–24364–00	19 – 14
63D–24367–00	19 – 13
68V–24374–00	10 – 22
6R3–24377–00	10 – 2
688–24378–00	8 – 17
	9 – 10
68V–24410–00	10 – 16
68V–24411–00	10 – 21
68V–24412–00	10 – 17
68V–24413–00	10 – 23
68V–24414–00	10 – 24
68V–24423–00	10 – 20
68V–24444–00	10 – 25
68V–24454–00	10 – 18
68V–24469–01	10 – 9
67F–24491–00	10 – 34
68V–24495–00	10 – 31
68V–24521–01	10 – 6
60C–24560–00	10 – 5
61N–24563–00	10 – 7
68V–24566–00	10 – 11
67F–24575–00	10 – 30
6YK–24610–00	31 – 3
6YK–24610–10	31 – 3
6YL–24641–00	31 – 4
67G–26301–10	18 – 40
67F–28100–01	10 – 38
67F–2812A–00	14 – 23
6A1–28176–00	17 – 49
67F–28199–77–A0	10 – 39

NUMERICAL INDEX
INDEX NUMERIQUE

PART NO. N° PIECES	REF. NO.
67F–28199–77–B0	10 – 39
67F–28199–88–A0	10 – 40
67F–28199–88–B0	10 – 40
61H–2819R–31	10 – 37
67F–41113–01–1S	2 – 13
67F–41114–A0	2 – 14
	36 – 9
67F–41131–01–5B	27 – 7
67F–41133–A1	27 – 8
	38 – 16
67F–41134–A0	27 – 17
	38 – 17
67F–41137–02–94	27 – 3
67F–41138–00	27 – 19
	38 – 18
67F–41213–01	21 – 41
67F–41237–00	21 – 38
682–41237–00	21 – 39
67F–41661–00–94	21 – 35
67G–42111–00–4D	18 – 2
67G–42115–10	18 – 18
664–42119–00	18 – 3
63D–42121–30–4D	18 – 56
63D–42126–00	18 – 11
67G–42131–00	18 – 50
6H2–42137–00	18 – 5
650–42152–00–94	18 – 19
67G–42153–00	18 – 25
67F–42154–00–94	21 – 26
67G–42159–00	18 – 21
6G1–42177–00	18 – 4
67G–42508–00	20 – 1
67F–42510–10–4D	23 – 9
67G–42526–00	20 – 11
63D–42527–00	20 – 6
63D–42528–00	20 – 17
67G–42541–00	20 – 4
67G–42541–10	20 – 7
624–42542–00	13 – 3
67G–42546–00	20 – 5
67G–42561–00	20 – 15
67G–42562–00	20 – 16
67F–42610–10–4D	1 – 1
67G–42610–10–4D	1 – 1
67F–42613–00–4D	1 – 10
67F–42615–00	1 – 13
61N–42628–00	1 – 12
67F–42628–00	1 – 19

PART NO. N° PIECES	REF. NO.
67F–42647–00	1 – 2
67F–42649–00	1 – 8
67F–42652–00	1 – 5
67F–42662–00	1 – 9
67F–42677–10	1 – 14
67G–42677–10	1 – 14
67F–42678–10	1 – 15
67G–42678–10	1 – 15
67F–42681–10	1 – 17
67F–42682–10	1 – 18
67F–42710–01–4D	17 – 1
648–42715–00	21 – 23
61A–42716–00	17 – 39
67F–42717–00	17 – 25
67F–42724–00	27 – 2
63D–42725–00	18 – 55
68V–42725–00	17 – 19
67G–42725–01	19 – 33
6H1–42726–21	17 – 22
6G1–42727–00	27 – 6
67G–42735–00	19 – 3
67F–42738–00–5B	17 – 17
67F–42741–00–4D	17 – 40
6H4–42748–00	17 – 24
68F–42753–00	17 – 46
67F–42756–00	17 – 20
67F–42761–00–94	2 – 35
67F–42815–00–4D	17 – 5
67F–42816–00–4D	17 – 6
67F–42818–00	17 – 9
67F–42828–00–5B	17 – 7
67F–43111–00–4D	22 – 1
67F–43112–00–4D	22 – 4
67F–43126–00	22 – 28
64E–43131–01	22 – 12
64E–43139–02	23 – 5
64D–43144–00	17 – 14
66T–43144–00	22 – 22
6E5–43145–01	32 – 8
67F–43181–00	22 – 18
67F–43311–10–4D	22 – 7
682–43318–01	20 – 8
67F–43631–00	22 – 20
67F–43800–03–4D	25 – 1
67F–43802–00	25 – 49
67F–43804–00	26 – 3
67F–43805–00	26 – 2
67F–43808–00	25 – 63

PART NO. N° PIECES	REF. NO.
67F–4380F–00	26 – 7
67F–4380K–00	25 – 3
67F–4380R–00	25 – 8
67F–43810–01	25 – 4
6H1–43812–00	25 – 13
67F–43816–00	25 – 29
6H1–43816–00	25 – 60
65W–43817–00	25 – 83
67F–43817–00	25 – 52
67F–43818–00	22 – 32
67F–4381B–00	25 – 38
67F–4381J–00	25 – 35
67F–43821–00	25 – 5
67F–43825–03	25 – 58
6H1–43829–00	25 – 44
67F–4382F–00	25 – 50
67F–4382G–00	25 – 64
67F–43830–00	25 – 78
6H1–43831–10	25 – 48
67F–43840–02	25 – 2
62X–43841–00	25 – 56
67F–43843–00	25 – 89
6H1–43844–10	25 – 80
61A–43845–00	25 – 70
61A–43847–00	25 – 75
61A–43848–00	25 – 68
6H1–4384F–10	25 – 79
62X–4384H–00	25 – 40
67F–43850–00	25 – 85
67F–43851–00	25 – 61
65W–43853–00	25 – 19
61A–43854–00	25 – 69
6H1–43856–10	25 – 81
67F–43857–00	25 – 34
67F–4385A–01	25 – 11
67F–4385H–00	25 – 84
61A–43860–20	25 – 67
65W–43861–00	25 – 82
67F–43861–00	25 – 14
62X–43862–00	25 – 15
65W–43862–00	25 – 76
67F–43862–00	25 – 30
67F–43863–00	25 – 27
62X–43865–00	25 – 31
6H1–43866–00	25 – 51
6H1–43867–00	25 – 54
65W–4386A–00	25 – 17
67F–4386A–00	25 – 90

PART NO. N° PIECES	REF. NO.
6T4–4386A–00	25 – 33
688–4386F–00	25 – 18
67F–4386K–00	26 – 6
62X–43871–00	25 – 24
67F–43871–00	25 – 43
6H1–43872–10	25 – 6
61A–43875–00	25 – 71
62X–43875–00	25 – 42
67F–43875–00	25 – 37
6H1–43875–00	25 – 73
62X–43878–00	25 – 59
67F–43879–00	26 – 12
67F–4387G–00	26 – 13
67F–4387J–00	26 – 14
67F–43880–00	25 – 91
	26 – 1
67F–43881–00	26 – 9
67F–43882–00	26 – 10
67F–43886–00	26 – 8
65W–43888–00	25 – 57
67F–4388A–00	25 – 32
67F–43891–00	26 – 4
67F–43893–00	25 – 20
67F–43895–00	25 – 88
67F–43896–00	26 – 11
62X–43899–00	25 – 39
67F–43899–00	25 – 28
67G–44100–10	18 – 15
67G–44104–00	18 – 16
67G–44113–00	18 – 22
67F–44117–00	21 – 5
67F–44118–00	21 – 18
67F–44120–10	21 – 14
67F–44121–00	21 – 11
688–44122–00	21 – 8
67G–44132–00	18 – 26
67F–44135–00	21 – 42
67F–44150–00	29 – 39
67G–44159–00–4D	18 – 45
67G–44173–00	18 – 46
6G8–44191–00	18 – 48
67F–44311–00	29 – 17
688–44315–A0	29 – 27
	38 – 3
688–44316–A0	29 – 33
	38 – 7
67F–44322–00	29 – 24
	38 – 23

PART NO. N° PIECES	REF. NO.
67F–44323–00	29 – 28
	38 – 26
688–44324–A0	29 – 29
	38 – 4
688–44341–01–94	29 – 30
67F–44352–00	29 – 25
	38 – 24
67F–44361–10	30 – 2
67F–44365–00	30 – 3
663–44366–00	29 – 21
663–44367–00	30 – 1
6H3–44391–01	17 – 23
67F–44514–00–94	23 – 17
67F–44526–00	23 – 20
6H1–44526–00	22 – 39
67F–44533–00	23 – 23
68F–44533–00	2 – 38
67F–44551–00–4D	23 – 15
67F–44553–00–4D	23 – 34
67F–44555–00–94	23 – 25
67F–44575–00	23 – 33
67F–45111–10–4D	27 – 22
67F–45113–00	27 – 31
	38 – 21
67F–45123–00	27 – 21
	38 – 20
67F–45127–00	27 – 20
	38 – 19
67F–45151–00	27 – 27
67F–45155–00	27 – 30
67F–45180–00–4D	24 – 1
67F–45181–00–5B	27 – 18
6H1–45214–00	30 – 9
6H1–45215–00	30 – 10
6H1–45251–03	22 – 37
67F–45300–10–4D	29 – 1
67F–45301–00–4D	29 – 2
67F–45318–00	27 – 25
688–45321–00	29 – 34
67F–45331–00–94	29 – 60
688–45341–10	29 – 4
67F–45371–00	30 – 13
688–45375–00	30 – 17
663–45376–00–94	30 – 18
6E5–45378–00	29 – 6
688–45383–02	29 – 66
688–45384–00	29 – 67
67F–45501–10	29 – 10

PART NO. N° PIECES	REF. NO.
688–45536–01	29 – 14
67F–45551–00	29 – 11
67F–45560–00	29 – 52
688–45567–01–10	29 – 55
688–45567–01–12	29 – 55
688–45567–01–15	29 – 55
688–45567–01–18	29 – 55
688–45567–01–30	29 – 55
688–45567–01–40	29 – 55
688–45567–01–50	29 – 55
67F–45571–00	29 – 56
67F–45576–00	29 – 64
688–45587–01–10	29 – 16
688–45587–01–12	29 – 16
688–45587–01–15	29 – 16
688–45587–01–18	29 – 16
688–45587–01–30	29 – 16
688–45587–01–40	29 – 16
688–45587–01–50	29 – 16
67F–45611–01	29 – 59
67F–45631–00	29 – 49
688–45633–00	29 – 51
67F–45634–00	29 – 43
6H1–45635–00	29 – 45
6H1–45668–00	29 – 44
688–45930–02–98	30 – 24
688–45932–60–98	30 – 24
6E5–45941–00–EL	30 – 24
6E5–45943–00–EL	30 – 24
6E5–45945–01–EL	30 – 24
6E5–45947–00–EL	30 – 24
6E5–45949–00–EL	30 – 24
6E5–45952–00–EL	30 – 24
6E5–45954–00–EL	30 – 24
6E5–45956–00–EL	30 – 24
688–45970–03–98	30 – 24
688–45972–02–98	30 – 24
688–45974–02–98	30 – 24
688–45976–01–98	30 – 24
688–45978–60–98	30 – 24
688–45987–01	30 – 19
67F–45997–00	30 – 20
67F–46241–00	5 – 17
63D–48119–00	18 – 24
703–48152–00	34 – 57
703–48153–00	34 – 3
63D–48154–00	18 – 12
703–48189–00	34 – 17

NUMERICAL INDEX
INDEX NUMERIQUE

PART NO. N° PIECES	REF. NO.
703–48198–00	34 – 14
703–48205–17	33 – 1
	34 – 1
703–48211–01	34 – 61
703–48212–00	34 – 58
703–48213–00	34 – 59
703–48215–00	34 – 43
703–48219–00	34 – 30
703–48221–00	34 – 56
703–48222–00	34 – 27
703–48223–00	34 – 28
703–48225–00	34 – 29
703–48226–00	34 – 26
703–48227–00	34 – 24
703–48232–00	34 – 62
703–48234–00	34 – 18
703–48235–00	34 – 4
63D–48236–00	18 – 23
703–48236–00	34 – 16
63D–48237–00	18 – 27
63D–48238–00	18 – 29
703–48238–00	34 – 22
703–48243–00	34 – 15
703–48244–00	34 – 21
703–48245–00	34 – 11
703–48246–00	34 – 23
701–48248–00	34 – 13
703–48252–00	34 – 12
67G–48261–00	18 – 17
703–48261–01	34 – 2
703–48264–00	34 – 6
703–48265–00	34 – 9
703–48268–00	34 – 5
703–48271–00	34 – 60
703–48281–00	34 – 31
703–48282–00	34 – 32
703–48284–00	34 – 52
701–48287–00	34 – 42
703–48291–10	34 – 39
703–48293–10	34 – 41
701–48320–40	33 – 2
701–48320–50	33 – 2
701–48320–60	33 – 2
701–48320–80	33 – 2
67G–48321–10	18 – 36
663–48344–00	21 – 3
703–48345–01	34 – 19
701–48350–00	33 – 2

PART NO. N° PIECES	REF. NO.
703–48358–00	34 – 20
67F–48511–00–4D	23 – 37
67G–48531–00	18 – 37
63D–48538–00	18 – 43
66R–48538–00	18 – 41
67F–48538–00	21 – 1
67F–61350–00	32 – 1
66T–81328–00	12 – 8
445–81328–20	12 – 7
67F–8132G–01	15 – 1
67F–81332–00	12 – 17
67F–81337–01	12 – 20
63D–81345–20	12 – 5
67F–81673–00	12 – 9
67F–81800–02	16 – 1
67F–81801–00	16 – 5
67F–81807–00	16 – 10
67F–81808–00	16 – 8
67F–81809–00	16 – 19
67F–81810–00	16 – 3
67F–81813–00	16 – 6
67F–81820–00	16 – 7
67F–81821–00	16 – 13
6K7–81826–10	16 – 24
67F–81828–00	16 – 25
67F–81830–00	16 – 17
67F–81832–00	16 – 11
67F–81836–00	16 – 12
67F–81839–00	16 – 21
67F–8183R–00	16 – 16
67F–8183T–00	16 – 18
67F–81840–00	16 – 4
67F–81841–00	16 – 14
67F–81842–00	16 – 20
67F–81846–00	16 – 26
67F–81850–00	16 – 2
67F–81857–00	16 – 9
67F–81869–00	16 – 23
67F–81891–00	16 – 15
67F–81916–01	14 – 35
67F–81919–00	14 – 38
67F–81941–01	16 – 22
67F–81942–00	14 – 22
67F–81948–00	14 – 19
6G1–8194A–10	14 – 3
6G1–81952–00	14 – 6
67F–81953–00	14 – 16
6E5–8195B–01	14 – 7

PART NO. N° PIECES	REF. NO.
6E5–8195C–01	14 – 10
67F–81960–11	13 – 23
67F–82105–00	14 – 2
67F–82116–00	14 – 15
6Y5–82117–00	35 – 17
6G5–82119–00	14 – 14
703–82119–00	13 – 30
	23 – 3
682–82119–01	14 – 1
67F–82127–00	22 – 11
67F–82148–00	22 – 25
6E5–82148–00	22 – 5
1E6–82151–00	35 – 16
67F–82151–00	14 – 25
67F–82151–10	14 – 26
67F–8215B–00	14 – 27
67F–82181–00	26 – 5
68V–82317–00	13 – 2
67F–82341–00	13 – 15
67F–82342–00	13 – 16
67F–82343–00	13 – 19
67F–82344–00	13 – 20
67F–82361–00	13 – 17
67F–82362–00	13 – 18
67F–82377–00	17 – 48
68V–82504–00	15 – 25
703–82510–43	34 – 44
67G–82510–50	19 – 9
63D–8252E–01–4D	19 – 11
63D–8252F–01–4D	19 – 12
703–82531–00	34 – 46
703–82540–00	34 – 50
688–82540–11	19 – 4
68F–82553–80	35 – 18
67G–82554–01	19 – 5
62Y–82555–00	19 – 6
682–82556–00	19 – 22
	34 – 48
67G–82563–00	19 – 25
703–82563–02	34 – 55
63D–82563–10	15 – 26
69W–82575–00	19 – 21
688–82575–01	34 – 47
676–82577–00	19 – 10
703–82577–00	34 – 45
6E3–8257H–00	17 – 50
689–8257Y–00	19 – 23
63D–82586–01	19 – 32

PART NO. N° PIECES	REF. NO.
6E5–82587–00	15 – 27
67F–82588–00	14 – 31
6E5–82588–00	17 – 26
688–8258A–20	34 – 49
67F–82590–03	14 – 24
703–82591–00	34 – 53
703–82592–00	34 – 54
703–82594–00	34 – 25
703–83383–02	34 – 51
688–83383–11	19 – 34
6H5–83386–00	19 – 35
6Y5–83500–S5	35 – 6
6Y5–8350T–03	35 – 1
6Y5–83533–T2	35 – 10
6H5–83553–12	19 – 31
6Y5–83553–M0	35 – 15
6K3–83557–00	19 – 2
6Y5–83557–10	35 – 19
6Y5–83557–31	35 – 11
6E5–83558–00	30 – 16
6E5–83558–10	29 – 8
6Y5–83570–S5	35 – 7
67F–83614–00	15 – 28
6A1–83625–41	12 – 26
6A1–83625–51	12 – 27
67F–83626–00	14 – 37
67F–83635–00	15 – 18
64E–83672–02	23 – 1
63D–83728–00	19 – 28
6Y5–83728–00	35 – 12
67F–85510–01	12 – 4
663–85518–00	21 – 27
67F–85540–02	13 – 1
689–85547–00	10 – 1
67F–85550–00	12 – 1
67F–85560–01	12 – 2
67F–85570–00	13 – 5
67F–85580–00	12 – 3
68V–85753–00	15 – 6
	36 – 8
67F–85757–00	15 – 5
67F–85790–00	15 – 4
61A–85885–00	15 – 12
6Y5–87122–S0	35 – 14
66T–87149–00	14 – 13
K0A–A3721–00	5 – 7
K0A–A3722–00	5 – 8
67F–W0001–02	36 – 1

PART NO. N° PIECES	REF. NO.
67F–W0001–21	38 – 1
67F–W0070–10	1 – 16
67F–W0078–00	38 – 22
67G–W0084–12–4D	18 – 1
67F–W0093–01	37 – 1
67F–W009A–21–1S	4 – 1
67F–W009B–05–1S	2 – 1
90101–09M01	32 – 7
90101–12M03	22 – 43
90101–12M09	18 – 57
90105–10M67	30 – 14
90105–10M89	4 – 19
90109–06M80	17 – 43
90109–06M81	17 – 27
90109–06M82	17 – 8
90109–06M86	15 – 29
	17 – 15
	21 – 2
90109–06M96	17 – 18
90109–12M37	23 – 19
90109–12M97	23 – 27
90110–12M00	24 – 4
90116–10175	23 – 38
90119–06M59	13 – 4
90119–06M81	22 – 38
90119–06M82	6 – 20
90119–06M83	10 – 29
90119–06M92	12 – 23
90119–06MA2	2 – 23
90119–06MA4	2 – 15
90119–07234	4 – 7
90119–07235	4 – 5
	10 – 35
90119–08M13	29 – 20
	38 – 31
90119–08M22	17 – 2
90119–08M58	27 – 1
90119–08M59	6 – 22
90119–08M66	2 – 5
90119–08M74	20 – 2
90119–08M84	30 – 8
90119–08M87	29 – 19
	38 – 30
90119–08M91	4 – 20
90119–10M06	5 – 15
90119–10M08	27 – 23
90119–10M72	5 – 22
90119–10M88	2 – 4

PART NO. N° PIECES	REF. NO.
90149–05M13	18 – 7
90151–05M00	30 – 11
90157–05M16	31 – 6
90159–06M18	18 – 47
90159–06M28	17 – 42
90159–06M29	4 – 30
	14 – 36
90167–06002	17 – 32
90170–06M30	14 – 4
90170–09M03	32 – 4
90170–16M01	29 – 12
90170–40003	5 – 24
90171–16011	30 – 22
90179–06M24	1 – 11
90179–24002	12 – 16
90183–02M03	29 – 48
90185–05002	30 – 12
90185–08057	20 – 14
90185–09M01	32 – 3
90185–10051	23 – 39
90185–10M14	20 – 9
90185–12M12	18 – 63
90185–22M11	22 – 15
90201–03313	29 – 47
90201–05M03	15 – 21
90201–06068	17 – 12
	21 – 29
90201–06M31	21 – 46
90201–08M01	20 – 3
90201–08M12	10 – 33
90201–09M02	21 – 16
90201–10M02	21 – 45
90201–10M20	32 – 2
90201–10M63	32 – 6
90201–10M76	20 – 10
90201–12M01	24 – 2
90201–12M05	22 – 45
90201–12M16	23 – 21
	24 – 5
90201–13M01	22 – 44
	23 – 22
90201–13M03	23 – 26
90201–13M19	23 – 31
90201–24014	12 – 15
90201–24M02	23 – 29
90201–25M05	29 – 58
90201–26M59	22 – 14
90201–30M00	23 – 10

NUMERICAL INDEX
INDEX NUMERIQUE

PART NO. N° PIECES	REF. NO.
90202–07M07	21 – 9
90202–25M04	23 – 30
90204–06M00	14 – 5
90206–10M04	21 – 47
90206–12M00	21 – 30
90206–12M22	18 – 59
90206–15M18	17 – 11
90250–07M02	29 – 50
90269–02M09	18 – 6
90280–04008	5 – 25
90280–04M04	29 – 26
	38 – 32
90280–05015	12 – 14
90282–04010	29 – 65
90340–08002	29 – 3
90340–14M06	2 – 6
	28 – 3
90344–51019	4 – 4
90386–06M12	21 – 12
90386–08032	18 – 10
90386–10M16	22 – 19
90386–12069	21 – 32
90386–12M93	18 – 61
90386–15M73	17 – 10
90386–18M35	22 – 29
90386–18M63	22 – 30
90386–18MA0	22 – 34
90386–25M31	22 – 13
90386–26MA3	18 – 49
90386–30M60	23 – 14
90386–30M77	23 – 13
90386–30M78	23 – 11
90386–90M90	21 – 15
90387–05M00	15 – 19
90387–06M43	17 – 45
90387–06M64	28 – 12
90387–06M71	12 – 21
90387–06M82	21 – 43
90387–08M37	17 – 4
90387–10M08	4 – 18
90387–10M42	32 – 5
90387–12M02	18 – 60
90387–18M01	22 – 33
90387–22M01	22 – 35
90389–25M00	30 – 21
90401–20145	2 – 40
90430–06014	6 – 8
90430–08020	29 – 5

PART NO. N° PIECES	REF. NO.
90430–08020	38 – 2
90430–08143	4 – 16
	36 – 2
90430–14115	2 – 7
	36 – 6
90430–14M09	28 – 4
	38 – 12
90445–07M31	29 – 7
90445–07ME0	30 – 15
90445–10M16	8 – 18
	9 – 11
90445–10M40	2 – 16
90445–10MG6	8 – 19
	9 – 12
90445–10MG7	8 – 20
	9 – 13
90445–13M11	10 – 15
90445–13M27	10 – 4
90445–15M03	5 – 20
90445–16M07	8 – 21
	9 – 14
90446–24M79	19 – 1
90464–09M47	15 – 15
90464–10M57	8 – 22
	9 – 15
90464–20258	17 – 47
90465–06M86	13 – 12
	15 – 9
90465–08M23	17 – 28
90465–08M63	22 – 9
	23 – 4
90465–08M83	8 – 23
	9 – 16
90465–10M77	22 – 2
90465–11M10	2 – 17
	6 – 14
	10 – 3
	15 – 11
	17 – 38
	23 – 7
	29 – 9
	35 – 13
90465–11M59	8 – 13
	9 – 6
90465–12M03	6 – 16
90465–13M11	14 – 34
	19 – 24
90465–13M24	19 – 29

PART NO. N° PIECES	REF. NO.
90465–13M30	19 – 30
90467–20M15	2 – 33
	6 – 15
90468–10005	18 – 39
90468–18008	21 – 4
90480–10M23	15 – 20
90480–12072	2 – 11
	4 – 25
90480–13M24	17 – 44
90480–15M31	12 – 22
90480–19M06	29 – 22
90480–20M05	2 – 20
90480–22M15	17 – 3
90501–10326	7 – 19
90501–12082	21 – 22
90501–12M48	29 – 46
90501–16M11	2 – 19
90501–23215	18 – 9
90506–14M24	22 – 24
90506–16M34	17 – 16
90506–16M39	5 – 19
91318–06020	25 – 47
91318–06035	25 – 46
91490–20010	18 – 14
91490–20015	21 – 17
91490–40025	30 – 23
91609–25014	10 – 32
91690–30018	21 – 28
91690–30020	22 – 21
91690–30025	18 – 20
91690–50014	6 – 11
91809–08006	4 – 6
	10 – 36
92903–08100	16 – 32
92903–08600	16 – 28
92903–10600	18 – 8
92907–04600	4 – 24
92907–06600	28 – 11
92990–04100	35 – 4
92990–06100	1 – 3
92990–06600	27 – 29
92990–08600	34 – 34
92990–12200	18 – 58
92990–12600	18 – 62
	21 – 31
92995–05100	15 – 23
92995–05600	15 – 14
92995–06100	12 – 12

PART NO. N° PIECES	REF. NO.
92995–06100	13 – 7
	14 – 29
	22 – 41
92995–06600	1 – 7
	2 – 10
	4 – 11
	6 – 18
	8 – 25
	9 – 18
	10 – 14
	12 – 13
	13 – 8
	14 – 18
	15 – 3
	18 – 33
	19 – 8
	21 – 7
	22 – 27
	27 – 10
	28 – 6
	29 – 37
92995–08100	22 – 17
	27 – 33
92995–08600	2 – 30
	4 – 14
	6 – 10
	18 – 31
	20 – 13
92995–10100	23 – 36
	30 – 6
92995–10600	30 – 7
93101–25M03	29 – 31
	38 – 5
93101–48002	3 – 3
	36 – 11
93102–38M59	5 – 16
	36 – 5
93102–48009	3 – 2
	36 – 10
93106–09014	29 – 35
	38 – 8
93210–04228	7 – 34
	37 – 12
93210–04230	7 – 27
	37 – 6
93210–06100	25 – 72
93210–064A5	25 – 65
93210–07003	25 – 62

PART NO. N° PIECES	REF. NO.
93210–07003	29 – 40
	38 – 10
93210–09165	25 – 45
93210–10M74	25 – 53
93210–11368	25 – 77
93210–16275	32 – 9
93210–18397	25 – 7
93210–19MJ1	28 – 29
	38 – 15
93210–24M79	4 – 36
	36 – 3
93210–29375	25 – 23
93210–29M94	23 – 12
93210–30682	10 – 28
	36 – 15
93210–32738	10 – 8
93210–40M10	6 – 5
	37 – 18
93210–41MJ2	6 – 21
	36 – 14
93210–46044	29 – 32
	38 – 6
93210–49046	29 – 38
	38 – 9
93210–86M39	29 – 63
	38 – 11
93306–207U0	29 – 57
93315–325W4	29 – 13
93317–322V0	29 – 53
93317–325U0	29 – 61
93332–000U3	29 – 15
93332–000UD	29 – 54
93410–18M05	22 – 31
93410–28M06	23 – 16
93420–36M01	27 – 26
93430–06024	34 – 10
93501–04M02	21 – 21
93501–08001	25 – 12
93503–16003	25 – 25
	29 – 42
93505–32038	25 – 66
93602–07244	25 – 21
93604–10M03	29 – 18
93604–12M07	28 – 28
93605–10108	5 – 13
93606–12019	2 – 3
	28 – 7
	30 – 4

PART NO. N° PIECES	REF. NO.
93606–19M23	27 – 16
93608–16M16	27 – 5
93700–06M03	22 – 8
94702–00391	4 – 37
95333–08600	16 – 31
95380–04600	35 – 5
95380–05600	21 – 40
	34 – 7
95380–06600	1 – 4
	17 – 41
	18 – 13
	34 – 40
95380–08600	10 – 12
95380–12600	22 – 46
95380–12700	23 – 32
	24 – 3
95780–12300	23 – 24
	24 – 6
97013–08016	16 – 29
97013–08045	16 – 27
97027–06025	28 – 10
97075–06020	2 – 26
	4 – 10
97075–06025	21 – 19
	28 – 5
97075–06030	27 – 12
97075–06050	27 – 14
97075–06070	27 – 9
97075–08025	2 – 29
	4 – 13
97075–08035	6 – 9
97075–10040	23 – 35
	30 – 5
97095–06010	6 – 7
	15 – 10
	22 – 3
97095–06012	1 – 6
	6 – 17
	8 – 24
	9 – 17
	13 – 13
	14 – 32
	21 – 33
97095–06014	18 – 34
	19 – 7
97095–06016	10 – 13
	14 – 17
	15 – 2

NUMERICAL INDEX
INDEX NUMERIQUE

PART NO. N° PIECES	REF. NO.
97095–06016	17 – 13
	22 – 40
	29 – 36
97095–06020	2 – 9
	13 – 9
	14 – 28
	19 – 17
97095–06025	2 – 36
	4 – 33
	13 – 24
	19 – 15
	21 – 36
97095–06030	4 – 27
	12 – 11
	13 – 6
	18 – 32
	19 – 19
97095–06035	21 – 44
97095–06040	21 – 6
97095–06045	28 – 26
97095–08014	4 – 15
97095–08016	27 – 32
97095–08020	22 – 16
97095–08025	20 – 12
97095–08040	18 – 30
97380–05025	34 – 8
97380–08030	34 – 33
97575–08445	23 – 18
97575–08540	27 – 4
97607–04110	12 – 6
97780–40512	29 – 23
97780–60525	23 – 6
97803–04010	7 – 9
97880–06012	22 – 6
97880–06016	27 – 28
97885–05010	15 – 13
97885–05025	15 – 22
97885–06010	12 – 18
97885–06016	18 – 53
	19 – 26
	23 – 2
97885–06040	18 – 51
97980–04114	7 – 11
	37 – 3
98507–04008	4 – 23
98580–03015	34 – 38
98580–04006	34 – 36
98580–04008	7 – 32
98580–04010	34 – 35
98580–05010	34 – 37
98785–05014	18 – 28
99001–08600	29 – 41
99530–08012	12 – 10
9E450–04433	35 – 2
9E450–04533	35 – 3

F80A/F100A
PARTS CATALOGUE
©2003 by Yamaha Motor Co., Ltd.
1st edition, May 2003
All rights reserved.
Any reprinting or unauthorized use
without the written permission of
Yamaha Motor Co., Ltd.
is expressly prohibited.
Printed in Japan.

F80A/F100A
CATALOGUE DE PIECES DETACHEES
©2003 par Yamaha Motor Co., Ltd.
1re édition, mai 2003
Tous droits réservés
Toute réimpression ou utilisation
non autorisée sans la permission écrite
de la Yamaha Motor Co., Ltd.
est formellement interdite.
Imprimé au Japon